FIREGEAR® by earthcore®

DO NOT DISCARD. THIS MANUAL HAS IMPORTANT OPERATING AND MAINTENANCE INSTRUCTIONS. LEAVE WITH THE HOMEOWNER.

These kits includes a valve and control system that is certified by Lab Test for USA and Canada to meet ANSI Z21:.97-2014, CSA C22.2 No 3-M1998 (R2014)

Model: FG-SCGNG-FS30DCV

c LC us

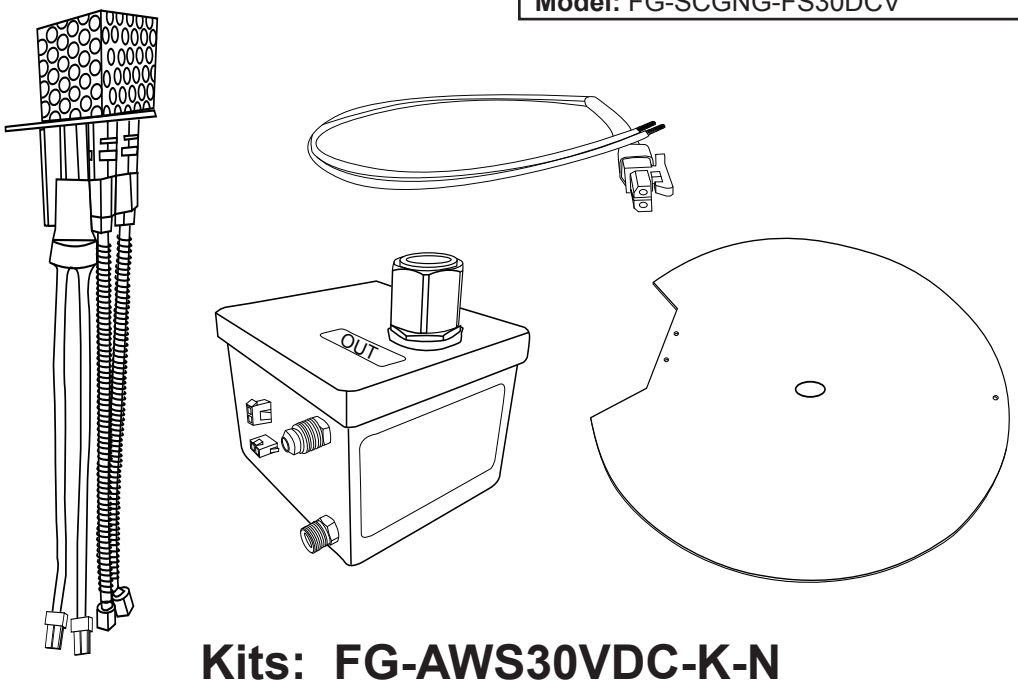

Kits: FG-AWS30VDC-K-N
FG-AWS30VDC-K-L

All Weather Electronic Ignition System

Installation and Operating Instructions

IF YOU CANNOT READ OR UNDERSTAND THESE INSTALLATION INSTRUCTIONS DO NOT ATTEMPT TO INSTALL OR OPERATE THIS APPLIANCE

INSTALLATION PRECAUTION:

This system requires a minimum 18-square inches (per side) of cross ventilation. Failure to provide proper ventilation will void the warranty.

Warning: For Outdoor Use Only

NATIONAL FIREPLACE INSTITUTE NFI CERTIFIED www.nficertified.org

We recommend that our gas hearth products be installed and serviced by professionals who are certified in the U.S. by the National Fireplace Institute® (NFI) as NFI Gas Specialists.

DANGER

CARBON MONOXIDE HAZARD

This appliance can produce carbon monoxide which has no odor.

Using it in an enclosed area can kill you.

Never use this appliance in an enclosed space such as a camper, tent, car or home.

DANGER

If you smell gas:

1. Shut off gas to the appliance
2. Extinguish any open flame.
3. If odor continues, keep away from the appliance and immediately call your gas supplier or fire department.

WARNING

Do not store or use gasoline or other flammable vapors and liquids in the vicinity of this or other appliances.

Any LP cylinder not connected for use shall not be stored in the vicinity of this or other appliances.

WARNING

Do not leave unattended during use.
Do not use for cooking.
Follow all gas leak procedures in this manual prior to operation.

WARNING

Improper installation, adjustment, alteration, service or maintenance can cause injury or property damage. Read the installation, operating and maintenance instructions thoroughly before installing or servicing this equipment.

WARNING

If the information in these instructions is not followed exactly, a fire or explosion may result causing property damage, personal injury or death.

FOR YOUR SAFETY

Do not store or use gasoline or other flammable vapors and liquids in the vicinity of this or other appliances.

CALIFORNIA PROPOSITION 65

WARNING

This product is designed to operate with one of the following fuel sources: Liquid Propane or Natural Gas. The fuel used to operate this product, and the products of combustion of such fuel, can expose you to chemicals including Benzene which is known to the State of California to cause cancer, birth defects and other reproductive harm and Carbon Monoxide which is known to the State of California to cause birth defects or other reproductive harm.

(For more information go to: www.p65Warnings.ca.gov.)

TABLE OF CONTENTS

Specifications	4
Carton Contents - Single Fire Feature & Multiple Fire Feature Kits	5
Preparing a Non Combustible Structure	6
Before Installing Decide; Ventilation; High Elevation; Hard Piping	6
Gas Pipe Sizing Chart	7
Pre-Installation Check List for Single Installation	8
Bowl Options	9-10
Linear, Round, Square Options	10
Power Supply Location for Single Installation	11
Available Burner Types - Burning Spur, Square, H-Style, Ring Style, T-Style	12
Burner Pan Preparation	13-14
Installing Burner and Orifice to Burner Pan	15
Installing Valve Kit to Burner Pan	16-17
Installing Key Valve	17-18
Installing Media	19
Wiring Diagram for Single Installation	20
Operating- Lighting Instructions	21
Multiple (more than one) Installation -Swimming Pool/Spa (Daisy Chain)	22-25
Pre-Installation Check List for Multiple Installations	26
AWS Replacements Parts	27
AWS Replacement Parts List	28
Trouble Shooting	29-31
Optional Accessories	32-33
Warranty	34
Template Cutout for AWS Plate	35

CAUTION

All media (i.e. lava rock, lava stones, lava boulders and fire glass) has the potential of thermal spalling. This is a process that may occur when media is wet and moisture gets trapped inside of the material due to rapid temperature differences. When this happens the media has the potential to crack or "pop" outside the fire feature.

WE HIGHLY RECOMMEND COVERING ALL FIRE FEATURES WHEN NOT IN USE

The use of a cover can lessen the impact of thermal spalling; however, heavy rains, high humidity and the presence of moisture may still cause the media to pop.

ALWAYS USE CAUTION WHEN USING THE FIRE FEATURE

Extra caution should be taken when lighting a fire feature when heavy rains, high humidity and moisture are present. Light the fire feature; leave the area allowing any moisture in the media to dissipate. We strongly recommend that during this drying out time that you monitor the fire feature from a distance. This drying out period should be no less than 30 minutes. Continue monitoring the flame from distance to ensure that all popping has ceased before fully enjoying the fire.

SPECIFICATIONS

Btu Ranges	A Pan Depth	B Combustible Side Wall	C Combustible Ceiling	D Combustible Floor
75,000- 150,000 Btu's	2 ½" - 3"	36"	96"	18"
150,000 - 250,000 Btu's	2 ½" - 3"	36"	120"	18"

Table 1 Installation specifications

DESCRIPTION This is a field serviceable (30VDC) commercial grade outdoor electronic system with a maximum gas capacity of 290,000 Btu's. The system features a built-in safety shut-off in case of flame loss and auto-relight. Models must be ordered specifically as Natural Gas (NG) or Propane (LP). **Note:** Only Natural gas models can be converted to Propane (LP) gas, if applicable. This system must be installed with a burner pan, burner and orifice and installed into an non-combustible enclosure. The "All Weather System" (AWS) requires a 120VAC Ground Fault Interrupter (GFI) to be installed in a weatherproof box. A power supply must be selected for each installation.

A: #GOE-30VDC is used for a single installation greater than 10-feet or more from pools/spas (water).
B: #FG-PS-30V320 is required for multiple (more than one) applications, and pools/spa (water) installations.

In the absence of local codes use the latest edition of the National Fuel Gas Code NFPA54 and National Electrical Code (NEC), or NFPA 70. The weatherproof box (supplied) should be mounted securely within 6-feet of the GFI box. The GFI box can power the adapter and optional remote control receiver, if applicable. **Note**: Gas line must be bonded at EACH FIRE FEATURE. See NEC- 680.26B

READ MANUAL COMPLETELY BEFORE INSTALLING. A SINGLE FIRE FEATURE AND A MULTIPLE FIRE FEATURE INSTALLATION HAVE SIMILAR REQUIREMENTS. UNDERSTAND HOW THEY OPERATE AND INSTALL.

NG Orifice #	*LP Orifice #*	*Btu's*
OAS-NG29	OAS-LP41	75,000 (21.98kW)
OAS-NG22	OAS-LP35	100,000 (29.30kW)
OAS-NG16	OAS-LP31	125,000 (36.63kW)
OAS-NG11	OAS-LP29	150,000 (43.96kW)
OAS-NG5	OAS-LP26	175,000 (51.28kW)
OAS-NG2	OAS-LP22	200,000 (58.61kW)
OAS-NG2	OAS-LP19	225,000 (65.94kW)
OAS-NG25/64	OAS-LP12	250,000 (73.26kW)

Table 2 Btu Specifications for Burner Spurs by Firegear Outdoors

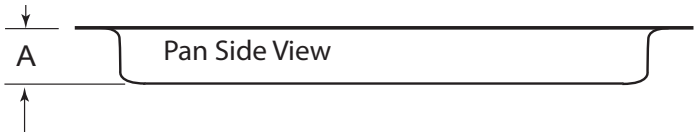

Fig. 1 Side view depth.

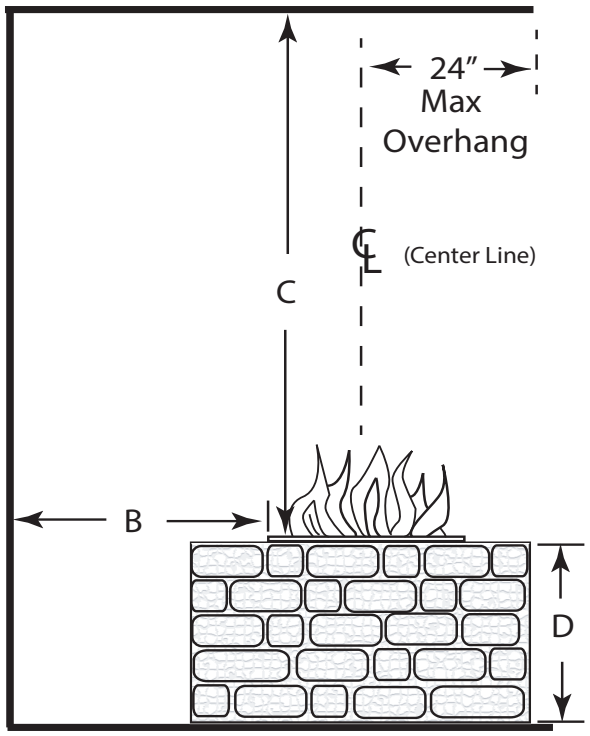

Fig. 2 Clearance to Combustibles (Not to be used in an enclosed space)

Disclaimer: Btu listings are based on 7.0"WC for Natural Gas and 11.0"WC for Liquid Propane (LP) at the burner orifice when using Firegear Outdoors Burning Spurs. If you use a burner other than a Burning Spur, Btu's will vary.

Note: Flex line size and proper gas pipe sizing will also affect Btu's. As a result your Btu's may vary slightly from Table 2 specifications.

Pressure	NG	LP
Min. Inlet	3.5" WC (⅛ PSI)	8.0" WC (¼ PSI)
Max. Inlet	14.0" WC (½ PSI)	14.0" WC (½ PSI)
Normal Inlet	7.0" WC (¼ PSI)	11.0" WC (⅜ PSI)

Table 3 Gas Pressures

CONTENTS

Parts are ordered two different ways, a' la carte or as a kit. See contents below to determine your parts.

KITS: FG-AWS30VDC-K-P (Propane Gas)
FG-AWS30VDC-K-N (Natural Gas)

CONTENTS:

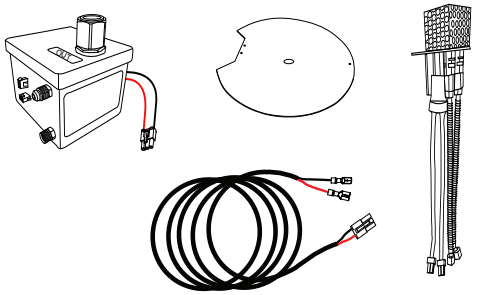

Model: FG-SCGNG-FS30VDC-K-P
Includes: Valve, Heat Shield, LP or NG Pilot Assembly & Power Wire to Valve

Model: Key valve and rocker switch mounting plate

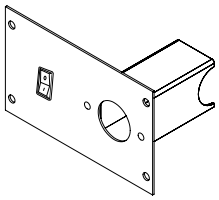

Includes:
(1) Plate-AWS
(4) 10-24x¾" Screws
(1) Brass Nut
(2) 8-18x½" Screws
(1) ½"NPT x ½" Flare

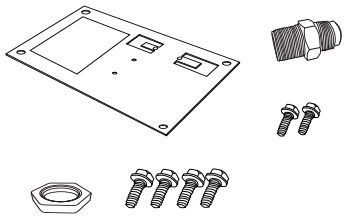

AWS-HARDWARE-BAG

ON/OFF Control Options
Model: FG-TIMER-2HR
Model: FG-1420-A-OD (remote)

Additional Safety Precaution Options
Model: FG-EMER (emergency stop)
Model: KV-PC-12 (key valve)

Note: A main burner orifice is typically provided when purchasing a burner; if not, an orifice **must** be installed.
DO NOT INSTALL THIS KIT WITHOUT AN ORIFICE

Single Installation Kit - Non-Pool/Spa Install
(Power Supply mounted inside fire feature enclosure)

MUST USE THE FOLLOWING:

1. FG-AWS30VDC-K-P (Propane Gas)
or
2. FG-AWS30VDC-K-N (Natural Gas)

WITH:

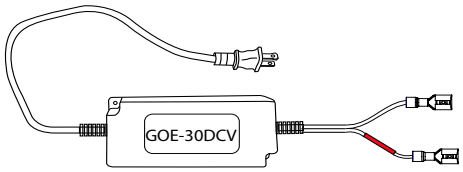

Model: GOE-30DCV power supply for single installs greater than 10' from pool/spa

Pool/Spa - 2 to 4 Fire Features - Long Distance Runs
(Power Supply mounted external to fire feature enclosure)

MUST USE THE FOLLOWING:

1. FG-AWS30VDC-K-P (Propane Gas)
or
2. FG-AWS30VDC-K-N (Natural Gas)

WITH:

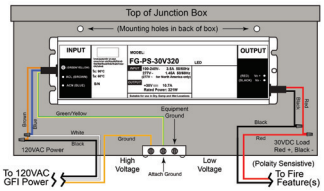

(1) Required for every (4) fire features

Model: FG-PS30V320 power supply for one to four installs less within 5' of a pool/spa

BEFORE INSTALLING A BURNER DETERMINE WHAT TYPE OF PAN WILL BE USED

The AWS models are not provided with pans or burners for installation. We suggest you provide an appropriate non-combustible burner pan to install the burner. Burner pans sizes listed in Table 1, page 4 are suggested sizes based on a Burning Spur model size. The pans can be round, square or a flat metal. **NOTE**: It is recommended to use 304 Stainless Steel.

Burner Pans should have ¼" drainage holes to prevent standing water in pan and the center hole should be large enough for the burner nipple to protrude through. The recommended material thickness for any burner pan or disc is 16 gauge or greater. **Note:** ⅛" aluminum plate can also be used as a burner pan or disc.
Once the Burning Spur is installed into a burner pan then proceed with this manual to complete the installation.

CAUTION: DO NOT use stiff screen or perforated metal as a burner pan. Some gases are heavier than air and screen or perforated metal can enable the gas to flow down inside an enclosure which could cause delayed ignitions or explosions.

LEVEL FLAT SURFACE Install fire feature on any level, outdoor non-combustible, flat stable surface or a combustible floor according to the clearances specified in this manual for a Firegear burner. **NOTE**: Depending on venting locations, do not place fire pit directly on grass, dirt, or rocks that could prevent proper ventilation. **Ensure proper water drainage is also incorporated into the fire feature enclosure.**

VENTILATION FOR NON-COMBUSTIBLE ENCLOSURE

Fire features are subjected to many outdoor elements such as rain, snow, wind, heat or cold. **A minimum of 18 square inches (opposite sides) of cross ventilation is required to keep the components in good working order.** Use Fig.8 on page 10 as guide to assist to incorporate proper ventilation.

HIGH ELEVATION INSTALLATION

This appliance is listed for elevations from 0- 4500 feet in Canada and the U.S. If elevation exceeds 4500 feet it may be necessary to decrease the input rating by changing the existing burner orifice to a smaller size. Input should be reduced 4% for each 1000 feet beyond the 4500 feet above sea level. Check with your local gas utility for assistance in determining the proper orifice in your location. In some cases the heating value may already be reduced and downsizing the orifice may not be necessary.

HARD PIPING TO FIRE FEATURE WITHOUT GAS PROXIMITY

NOTE: Refer to the NFPA 54 (National Fuel Gas Code) for proper pipe sizing. See gas line sizing chart on page 7 as a reference.

1. Turn **OFF** gas supply system. **NOTE**: All gas connections (except for brass to brass) require the following. Clean pipe threads using either a wire brush or steel wool. Apply pipe sealant to the fittings before making any connection.
2. Ensure all gas connections are tight, but do not over tighten! **BE CAREFUL!**
3. Install necessary pipe for the distance required and a manual shut-off valve at the exterior house wall. Check with local codes for proper procedures. If pipe is to pass through a foundation or house wall, make sure to seal the area around the pipe with weather sealant. Consult a plumber for proper installation to ensure you are providing adequate gas supply for your application.
4. The primary gas shut-off (not supplied) will require a ½" male flared fitting to enable connection of the stainless steel flex gas line (not supplied) with the fire feature.
5. Do not place an LP tank inside any fire pit enclosure. Locate all Liquid Propane (LP) tanks outside the enclosure.
6. To prevent performance problems with LP gas fire pits, do not use a LP tank less than 100 LBS. capacity.

IMPORTANT
Installation of all gases should be done by a qualified installer, service agency or gas supplier.
This appliance must be isolated from the gas supply piping system by closing its manual shutoff valve during any pressure testing of the gas supply piping system at test pressures equal to or less than ½" psi (3.5kPa)

GAS PIPE SIZING CHART

NATURAL GAS : PIPE SIZING CHART

Length of Pipe in Feet	1/2"	3/4"	1"	1 - 1/4"	1 - 1/2"	2"	2 - 2 1/2"	3"	4"
10	108	230	387	793	1237	2259	3640	6434	-
20	75	160	280	569	877	1610	2613	5236	9521
30	61	129	224	471	719	1335	2165	4107	7859
40	52	110	196	401	635	1143	1867	3258	6795
50	46	98	177	364	560	1041	1680	2936	6142
60	42	89	159	336	513	957	1559	2684	5647
70	38	82	149	317	476	896	1447	2492	5250
80	36	76	140	239	443	840	1353	2315	4900
90	33	71	133	275	420	793	1288	2203	4667
100	32	68	126	266	411	775	1246	2128	4518
125	28	60	117	243	369	700	1143	1904	4065
150	25	54	105	215	327	625	1008	1689	3645
175	23	50	93	196	303	583	993	1554	3370
200	22	47	84	182	280	541	877	1437	3160
300	17	37	70	145	224	439	686	1139	2539

- Natural Gas (NG) flow is given in thousands of BTU/hr. = 1 cubic foot of NG gas - 1000 BTU
- Nominal pressure at the burner for Natural Gas is 3.5" of water column. (Typical machine supply 5"-7")
- Pipe length must include additional length for all fittings. Add approximately 5 feet of pipe per fitting.
- Natural Gas Example: A machine with a burner that requires 440,000 BTU would need a 1 -1/4" pipe for a 20" long run.

LIQUID PROPANE : PIPE SIZING CHART

Length of Pipe in Feet	1/2"	3/4"	1"	1 - 1/4"	1 - 1/2"	2"	2 - 2 1/2"	3"	4"
10	275	567	1071	2205	3307	6221	10140	17990	35710
20	189	393	732	1496	2299	4331	7046	12510	25520
30	152	315	590	1212	1858	3465	5695	10110	20620
40	129	267	504	1039	1559	2992	4778	8481	17300
50	114	237	448	913	1417	2646	4343	7708	15730
60	103	217	409	834	1275	2394	3908	6936	14150
70	89	185	346	724	1086	2047	3329	5908	12050
80	78	162	307	630	976	1811	2991	5309	10830
90	69	146	275	567	866	1606	2654	4711	9613
100	63	132	252	511	787	1496	2412	4281	8736
125	54	112	209	439	665	1282	2083	3618	7382
150	48	100	185	390	590	1138	1808	3210	6549
175	43	90	168	353	534	1030	1637	2905	5927
200	40	83	155	325	491	947	1505	2671	5450
300	37	77	144	303	458	887	1404	2492	5084

- Liquid Propane (LP) Gas flow is given in thousands of BTU/hr. = 1 cubic foot of LP gas - 2500 BTU.
- This chart refers to low pressure LP, after regulation, Standard nominal pressure at the burner for Liquid Propane Gas is 11" of water column.
- Pipe length must include additional length for all fittings. Add approximately 5 feet of pipe per fitting.
- LP Example: A machine with a burner that requires 440,000 BTU would need a 1" pipe for a 20' long run.

NOTE: The sizing charts above list the specific pipe sizes required for the amount of BTU's for a new gas line installations. If you are using an existing gas line you must take into consideration the existing gas line capacities to ensure you will have proper pressure. This chart is for reference only, we recommend you consult with a Licensed Plumber/Gas Fitter or NFPA54 (National Fuel Gas Code - current edition) for more details.

Table 4 Gas Pipe Sizing Chart

PRE-INSTALLATON CHECK LIST FOR SINGLE INSTALL

GAS INFORMATION

Gas Volume - Ensure the correct size pipe is used for the total gas load. If installing more than one fire feature, ensure the correct size pipe is based upon the distance of the furthest fire feature away and the total gas load is for all gas appliances on that gas line (i.e. fire feature, BBQ, torches, etc.).

Gas Pressure & Type of Gas - Verify the gas pressure being supplied to the fire features? Is the fire feature(s) configured for the proper gas type? The AWS gas valve is for Natural gas (NG). To convert to Propane (LP) gas, the secondary pilot orifice must be changed.

Manual Shut-off/Key Valve - Is there a manual shut-off or key valve installed within 6-feet of the fire feature? Did you verify proper distance with local and national codes?

Purging a New Gas Line - Has the gas line been purged of both air and possible debris? Any gas lines buried underground must be pressure tested up to 60PSI to ensure no leaks. After inspection is complete, most plumbers will release pressure in the line at one location by opening the manual ball/key valve. It is recommended to release pressure by opening a ball/key valves associated with all the fire features. ***Example***: There are four fire features on a job, open the first key valve for a few seconds, then close it. Then move on to the next key valve and do the same thing until you have purged the debris out of all four gas lines.

Main Burner Orifice - All fire features **MUST** have a main burner orifice installed on the inlet side of the burner. An orifice limits the amount of gas flow to the burner to ensure the flame is a safe and reasonable height to not pose a risk to people or property. The drawings below show the difference between a Natural Gas (NG) and Propane (LP) orifice. LP gas requires ventilation holes at the base of the orifice to provide a cleaner flame. See Fig. 3.

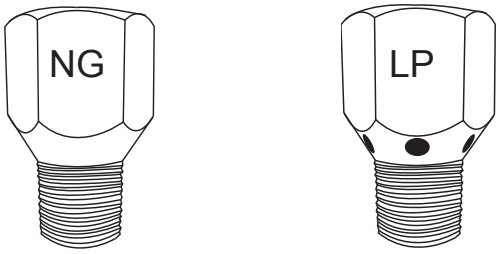

Fig. 3 Natural (NG) orifice on left; LP (vent holes) on right.

ELECTRICAL INFORMATION

Wire Gauge - Is the wire gauge correct? Wiring must be 12AWG or greater (solid or stranded) for all installations.
Note: It is recommended to fill the wire nuts with either dielectric grease or silicone prior to installing the wire nut. This will ensure a waterproof connection.
Why GFI circuit? A GFI is a type of circuit breaker which shuts off electric power when it senses an imbalance between the outgoing and incoming current. It protects the house wires and receptacles from overheating and possible fire.
Power Supply - Firegear Outdoors offers two (2) power supplies for use with the fire features. Each power supply requires 120VAC power to operate and converts it to 30VDC to operate the gas valve. **DO NOT CONNECT 120VAC DIRECTLY TO THE GAS VALVE WIRES - DAMAGE WILL OCCUR. THIS IS NOT COVERED BY WARRANTY.** The #GOE-30VDC is used for one fire feature only - installed 10-feet or greater from a pool or spa. This power supply has a 3-foot power cord to plug into 120VAC outlet and a 3-foot leads to connect to the gas valve on the 30VDC side.

The FG-PS-30V320 model can be used for one or a maximum of four fire features in series. The maximum distance the furthest fire feature can be from the power supply is 500-feet. In addition, the FG-PS-30V320 model enables a fire feature to be installed within 5-feet of a pool or spa (water).

Bonding - Gas lines must be bonded AT EACH fire feature. (Refer to National Electric Code 2017 Section: 680.26(B).

MEDIA INFORMATION

Acceptable media placed over top of the burner:

Lava Rock	Min.1”- 2” size FG-LAVA-10 (10 LB) FG-LAVA-50 (50 LB)
GL Glass	Min. ½” - ¾” size Various colors are available See Product catalog for details *Sold in 5 LB bags or 8 bags to a case*
GRL Reflective Glass	Min. ½” - ¾” size Various colors are available See Product catalog for details *Sold in 5 LB bags or 8 bags to a case*

DRAINAGE INFORMATION

For any fire feature ABOVE ground level requires a drain/holes line or a way for water to exit the fire feature.

Note: This AWS system is not approved to be installed BELOW ground level.

BEFORE INSTALLING DETERMINE WHAT PAN AND BURNER TO USE:

The burner and pan are not provided with this valve kit. You are required to use a non-combustible burner pan with an appropriately sized burner. The pans can be round, square or flat metal discs. It is recommended to use 304 Stainless Steel for all installations. Burner pans should have sufficient ¼" drainage holes to prevent standing water in pan. The center hole should be just large enough for the burner nipple to protrude through the pan for connection. A recommended material thickness for any burner pan or disc is 16 gauge or greater.

CAUTION: DO NOT use stiff screen or perforated metal as a burner pan. Some gases are heavier than air and a screen or perforated metal can enable the gas to flow down inside an enclosure which could cause delayed ignitions or explosions.

FIREBOWL OPTION

Bowls are normally made of concrete or metal and make a great option as a fire feature. A flat disc is used to install the burner with ¼" drain holes surrounding the burner. Because of the differences between Natural Gas (NG) (being lighter than air) and Propane gas (being heavier than air), precautions must be taken when installing burners. Depending on the type gas you are using, follow the criteria listed below for both Natural (NG) and Propane (LP) gas:

Propane Gas:

- Bowls require cross ventilation at the Bottom of bowl. See Fig. 4.
- Burner port holes are to be facing upward toward the sky (if applicable).
- Burner can be no lower than 3-inches inside bowl.
- Burner can be no closer than 6-inches from side of bowl. **Note:** This is to keep bowl from cracking or warping from too much heat.
- A vent line or drain line must be provided to prevent any accumulation of trapped gas.
- Bowl must be safely secured into place on a non combustible surface.

Natural Gas:

- Bowls require cross ventilation at the bottom of bowl. Bowls require ventilation at the Top of bowl incorporated into the disc/pan. See Fig. 6.
- Burner port holes are to facing upward toward the sky (if applicable).
- Burner can be no lower than 3-inches inside bowl.
- Burner can be no closer than 6-inches from side of bowl. **Note:** This is to keep bowl from cracking or warping from too much heat.
- A vent line or drain line is recommended but not required to prevent any accumulation of trapped water. Bowl must be safely secured into place on a non-combustible surface.

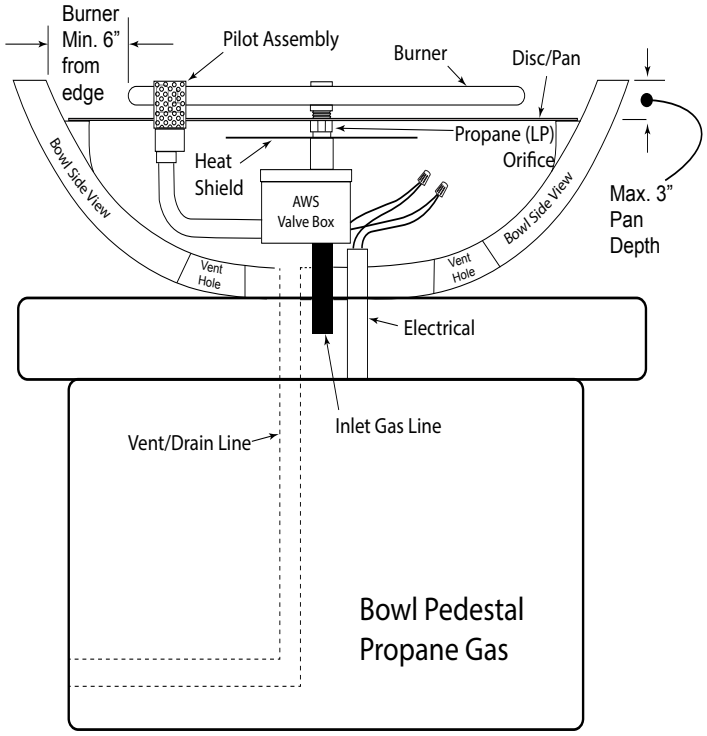

Fig. 4 Bowl installation for Propane (LP) gas.

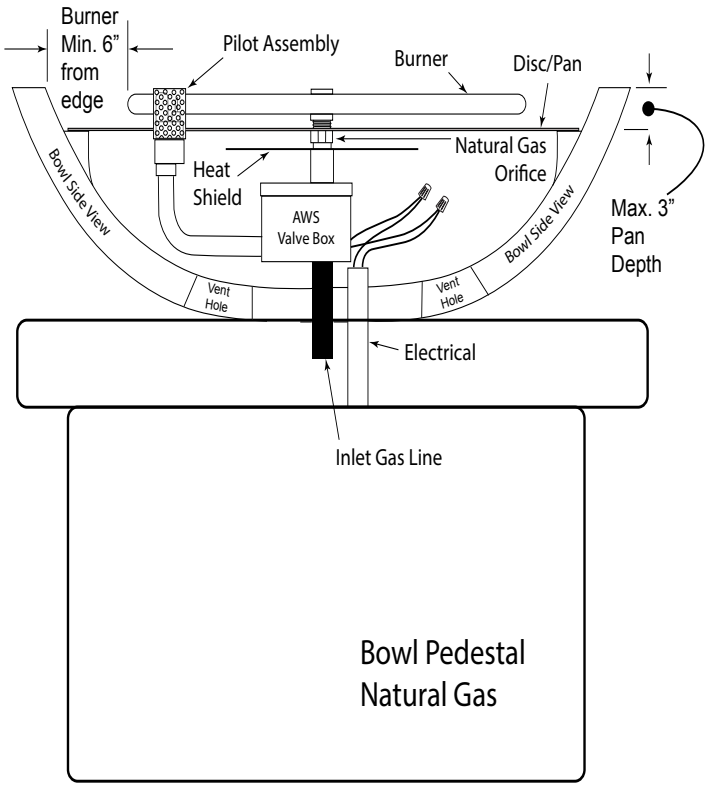

Fig. 5 Bowl installation for Natural Gas.

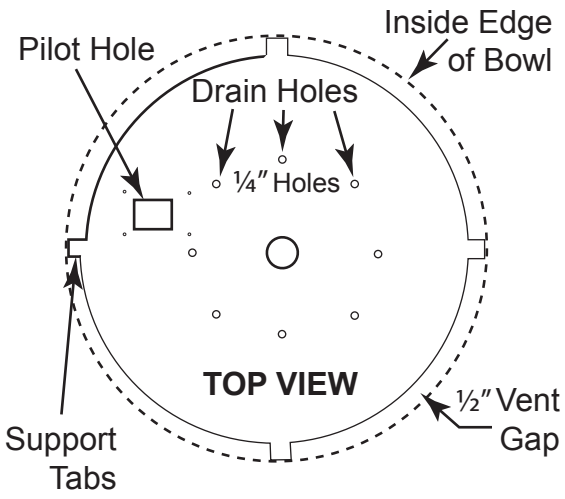

Fig. 6 Show top view of suggested disc for Natural Gas installation. **Note:** Not to be used for Propane Gas (LP).

LINEAR FIRE FEATURE OPTION

Linear products most often incorporate a single "T-style" or double burner tube (H-style) that creates a rectangular style fire feature. A single valve can accommodate burners 24-inches up to a maximum of 14-feet long. One AWS system is adequate for a burner system up to 14-feet. For systems beyond 14-feet, see the Custom Quote Form (Firegear Outdoors.com home page) should be filled out and submitted for the particular application.

Propane or Natural Gas Criteria:

- Recommended gas supply is 20,000 Btu's per each linear foot.
- 18 square inches of cross flow ventilation is required into the enclosure (end to end). See Fig. 8
- Burner can be no lower than 3-inches inside pan.
- Enclosure must be safely secured in placed on a non combustible surface.
- Recommended pan depth is 2 ½" - 3".

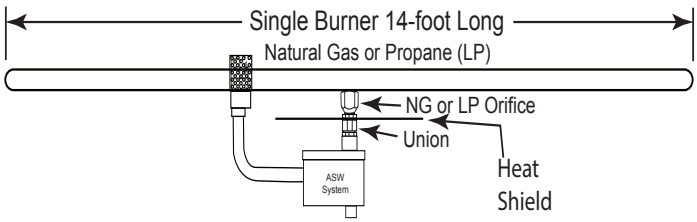

Fig. 7 Show a maximum length single linear burner.

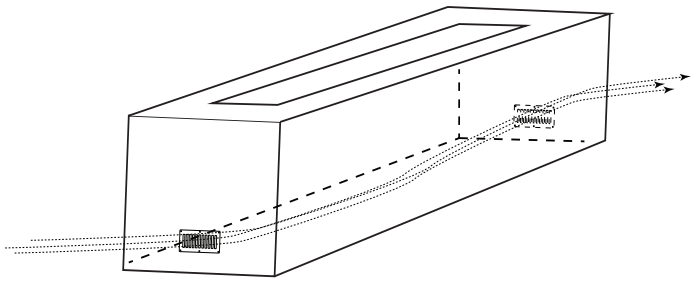

Fig. 8 Shows cross ventilation for a linear enclosure.

ROUND OR SQUARE FIRE FEATURE OPTION

Round and square fire features can incorporate many types of round or square burners. Each installation will vary and depends on design being used. The criteria for these fire features are as follows:

Propane (LP) or Natural Gas (NG) Criteria:

- Enclosure must be safely secured in place on a non combustible surface.
- 18 square inches of cross flow ventilation is required into the enclosure (end to end). See Fig. 8.
- Burner can be no closer than 6-inches from side of enclosure. Refer to manufacturer of burner for specific distances based upon Btu's. **Note:** This is to keep bowl from cracking or warping from too much heat.
- Recommended pan depth is 2 ½" - 3".
- Burner can be no lower than 3-inches inside pan.

ALL PANS OR DISCS MUST BE REMOVABLE FOR SERVICE

Pans or discs CANNOT be installed in a manner to prevent them from being removed for service.

Top coping material or top cap of fire feature MUST NOT overlap onto the pan or disc surface. Pan lip or disc outer edge must be be unobstructed so it can be lifted out of the fire pit or fire feature for servicing.

POWER SUPPLY LOCATION

The GOE-30VDC power supply should be installed inside the enclosure due to the wire length limitations. The power cord is 3-feet long the 30VDC leads to the valve are 3-feet long. See Fig. 9

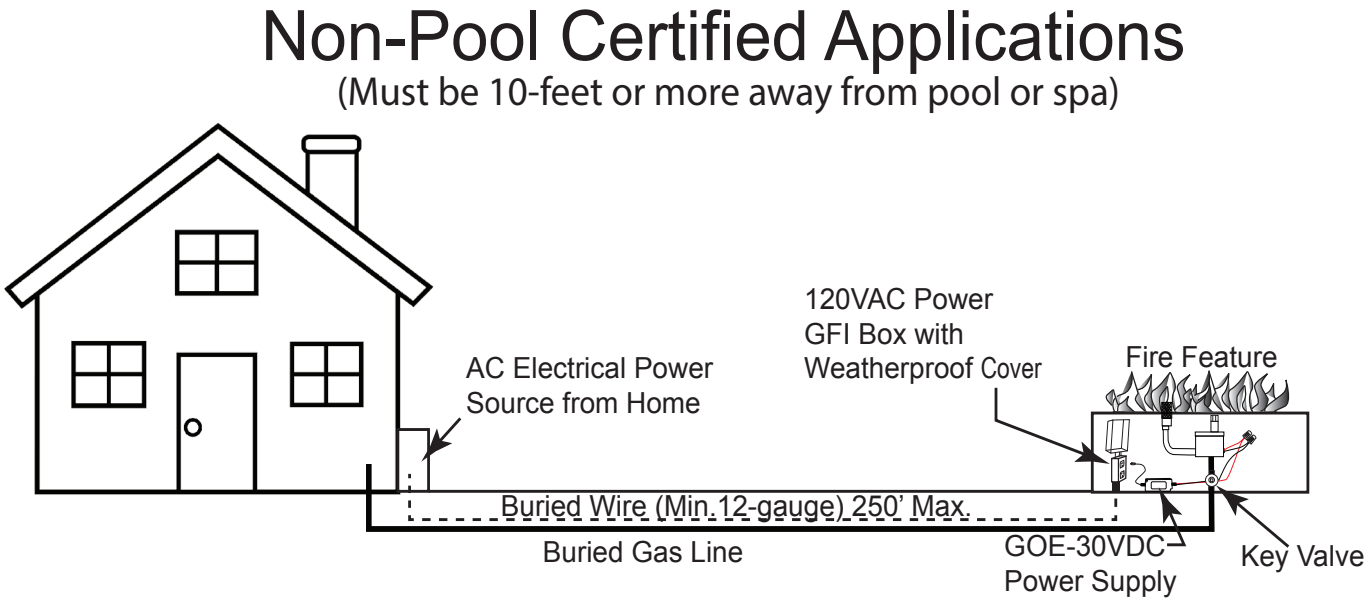

Fig. 9 Example of a single fire feature install. **Note**: Must be 10-feet or more from a pool/spa.

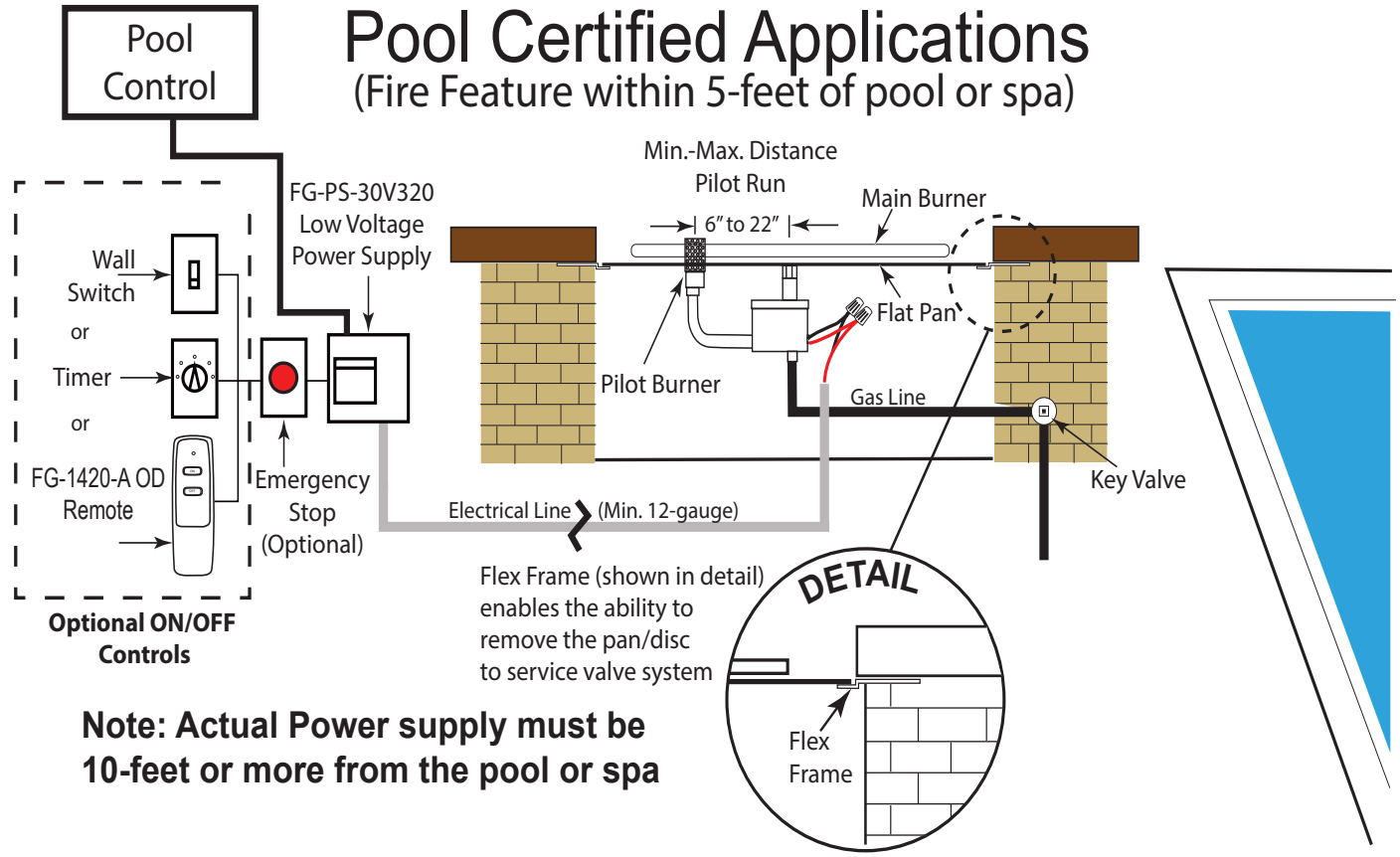

Fig. 9a Example of single fire feature install within 5 feet of a pool or spa. **Note:** Requires FG-PS-30V320 power supply (purchased separately). Do not use the GOE-30VDC. **FG-PS-30V320 power supply can be installed up to a maximum of 500-feet away from fire pit.**

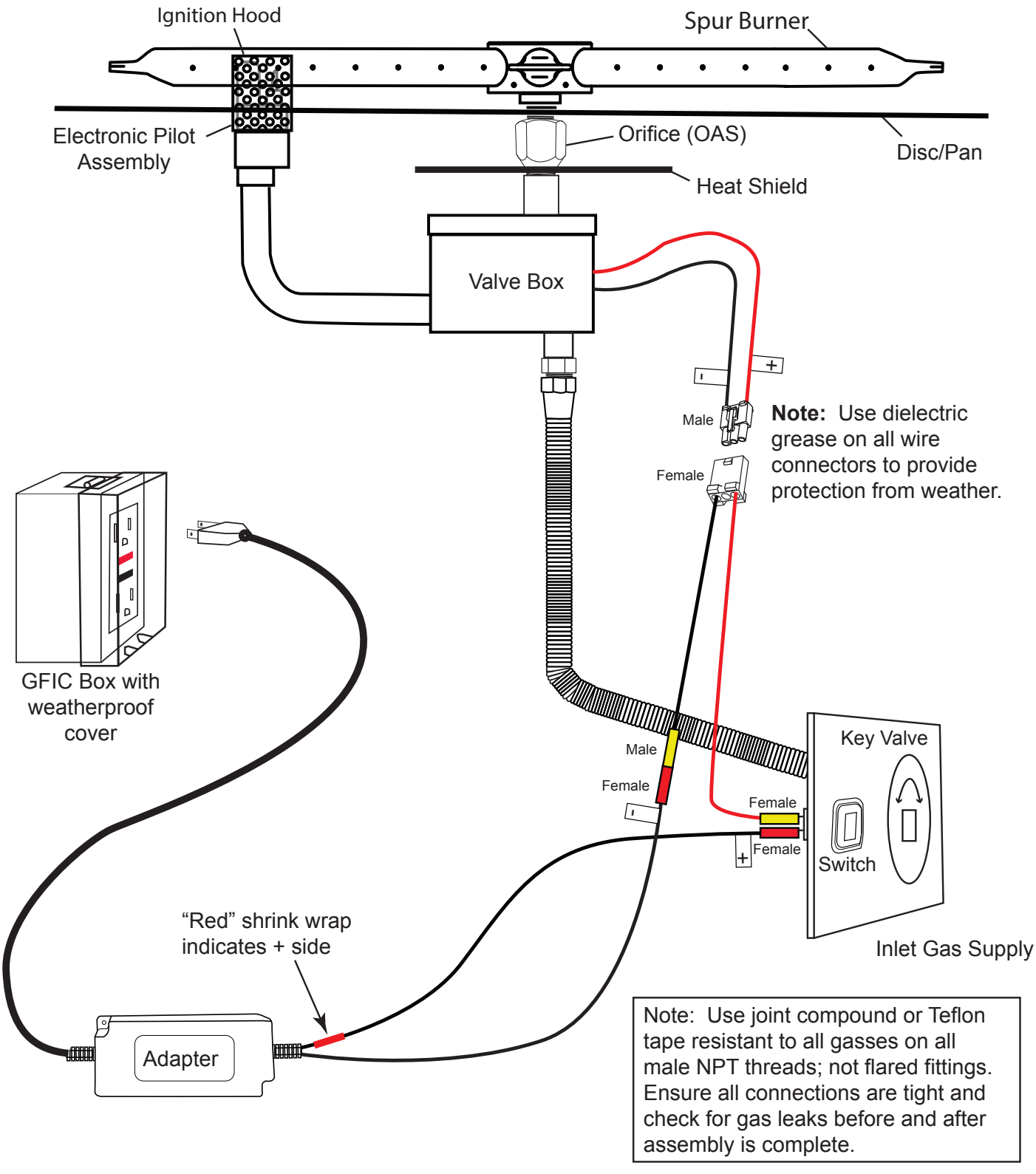

Fig. 9b Wiring diagram using GOE-30DCV power supply.

AVAILABLE BURNER TYPES

There are many different styles of burners to choose. See the examples on this page. Some burner port holes are located on the side of the burner, others port holes are on the top or bottom. Install pilot assembly facing a port hole or directly between two port holes, on the outside of the burner. Never inside of a burner. Careful not to have a port hole with flame directly hitting the thermocouple. This could cause premature shutdown. See Figs 10-14. Ensure burners with port holes on the top or bottom are installed burners with port holes facing upwards toward the sky. A template on the back of this manual will be used to cut a hole in the pan and locate the pilot in the correct position. **DO NOT INSTALL THE PILOT ASSEMBLY WITHOUT USING THE TEMPLATE.**

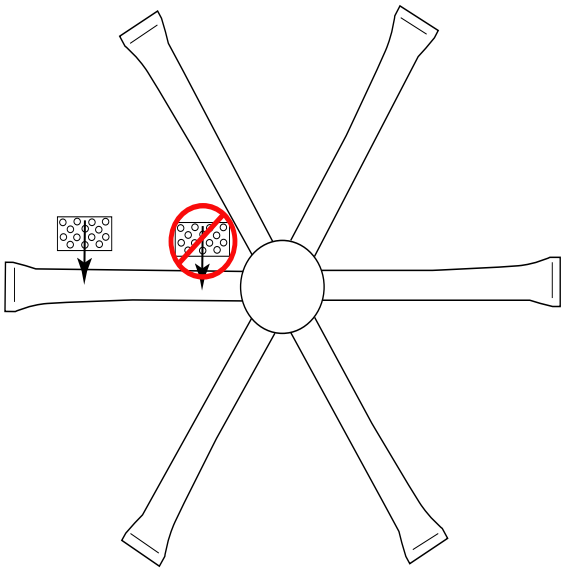

Fig. 10 Spur type burner with six legs. Port holes in sides of the legs.

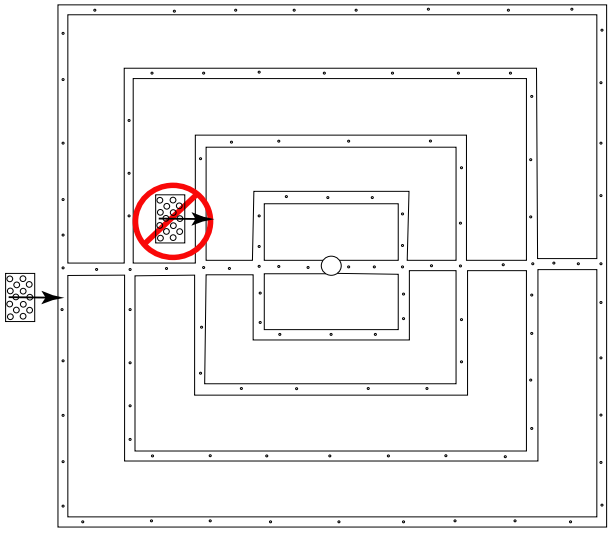

Fig. 11 Square type burner with port holes on top. This must be installed with port holes upward.

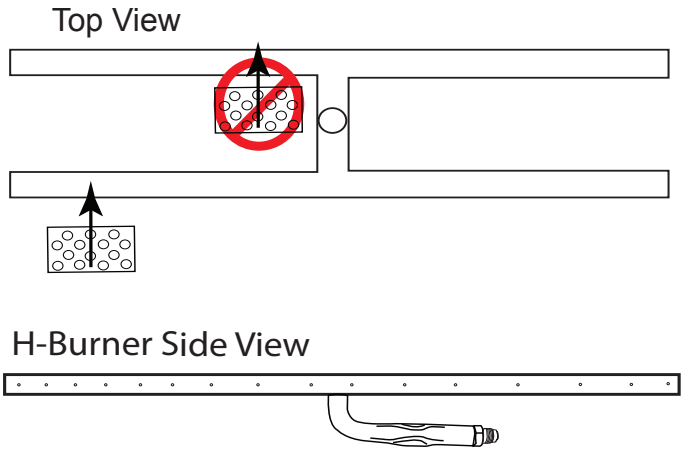

Fig. 12 H-style burner with port holes on the sides of legs.

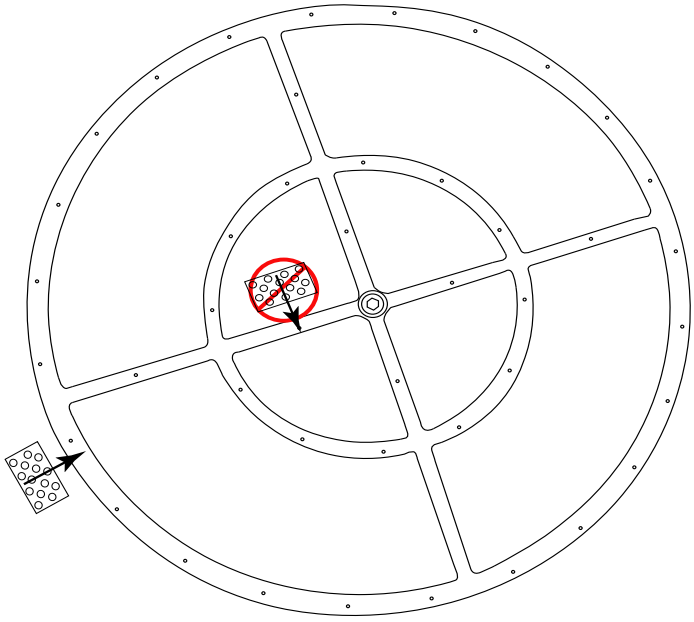

Fig. 13 Round type burner with port holes on top. This must be installed with port holes upward.

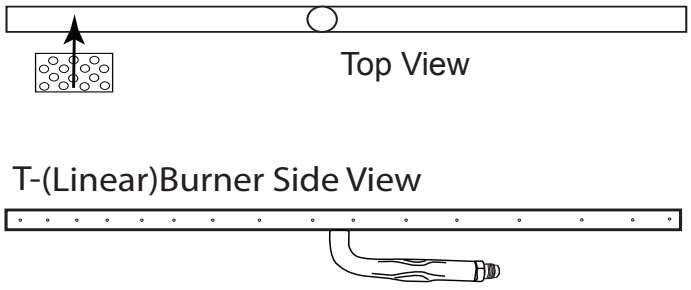

Fig. 14 T-style burner with port holes on the sides of legs.

BURNER PAN PREPARATION

Depending on the design of the fire feature, the burner pan will require a center hole drilled or cut into the pan. The drawings below show a couple of examples.
Note: Your design may vary with some custom pans.
The center hole should be just large enough for the burner nipple to protrude through the pan to enable it to be safely secured. See Fig.15

After the center hole is complete, temporarily install the burner to locate pilot assembly in the burner pan.

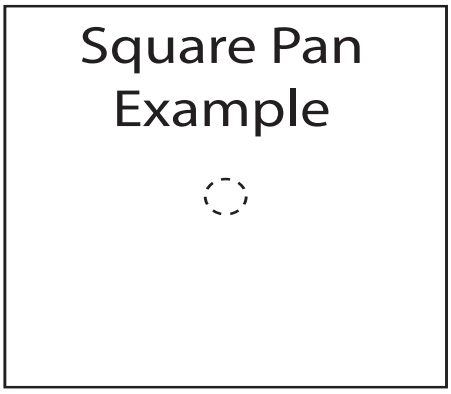

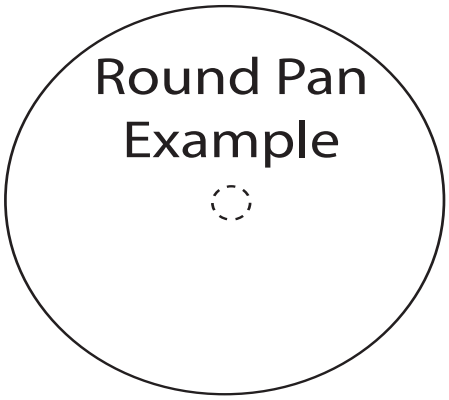

Fig. 15 Center hole examples of burner pans.

CUTTING PILOT ASSEMBLY HOLE INTO PAN

Before installing the AWS system, the burner pan must be prepped for accepting the pilot assembly. It is crucial to ensure the pilot assembly is installed in the proper location and proper distance from the burner.

The pilot assembly must mount within 22-inches of the valve box. The pilot assembly gas lines are 24” long. See Fig. 15a. Also see Fig. 9a on page 11.

In the parts box is an #AWS-PLATE. The plate has two tabs and a large square hole. Orient the plate as shown in Fig. 16. Uses a pair of needle nose pliers and bend the tab closest to the square hole up 90°. See Fig.17. Leave the other tab as is, in the flat position.

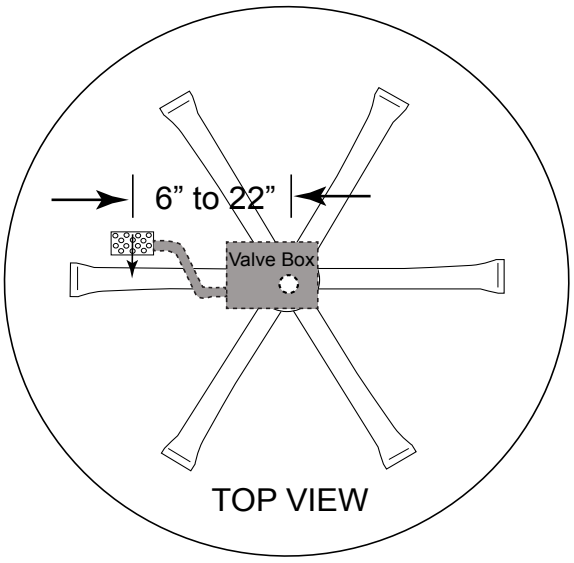

Fig. 15a Shows top view of valve underneath pan locating the pilot assembly.

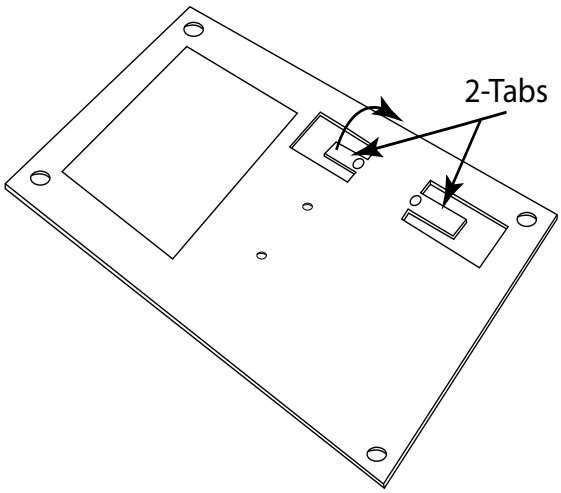

Fig. 16 Shows AWS-PLATE in flat position.

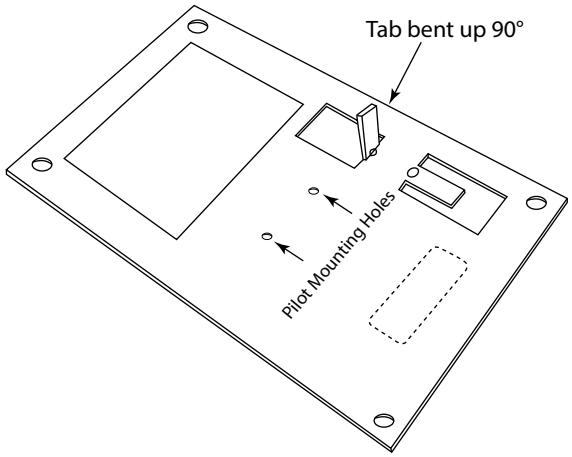

Fig.17 Show one tab bent upward 90°.

PREPARING THE BURNER PAN FOR PILOT INSTALLATION

After the burner is temporarily installed into the burner pan place the AWS-PLATE with 90° tab facing the burner leg or tube. Press the tab against the burner and ensure the square hole in plate is centered over a burner port hole. See Fig.18 Align the tab square with the leg as shown in the figure drawing and mark the outside (4) corner holes of the plate with a pencil. See Fig. 19. Other examples of pilot location are shown on page 12 of this manual.

On page 35 of this manual is a paper template to cut the proper hole size in the pan. Cut the template with scissors and cut out along the dotted lines removing the square hole and the (4) outside holes from the template. Place the template on the pan, aligning with the (4) outer holes and trace the square hole out of the center of the template with a pencil. Drill the (4) corner holes with a 13/64" (5.15mm) or a #7 numbered drill bit and cut out the square hole to finish the pan preparation. **Note:** Titanium drill bits work best with drilling stainless steel.

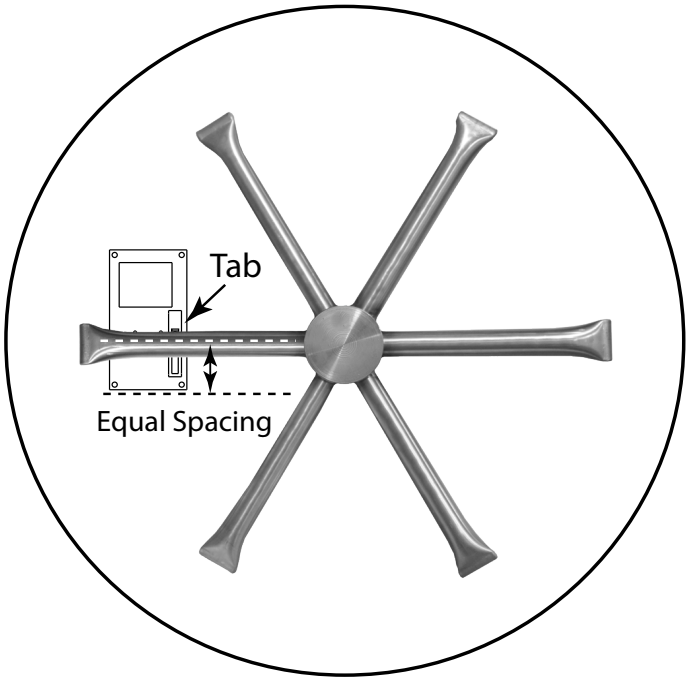

Fig.18 Show aligning AWS-PLATE to burner.

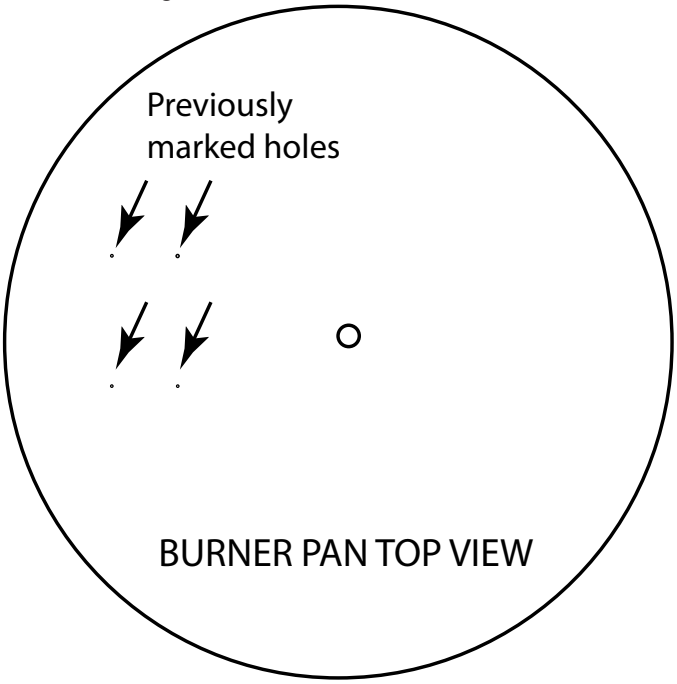

Fig. 20 Shows marking to place template.

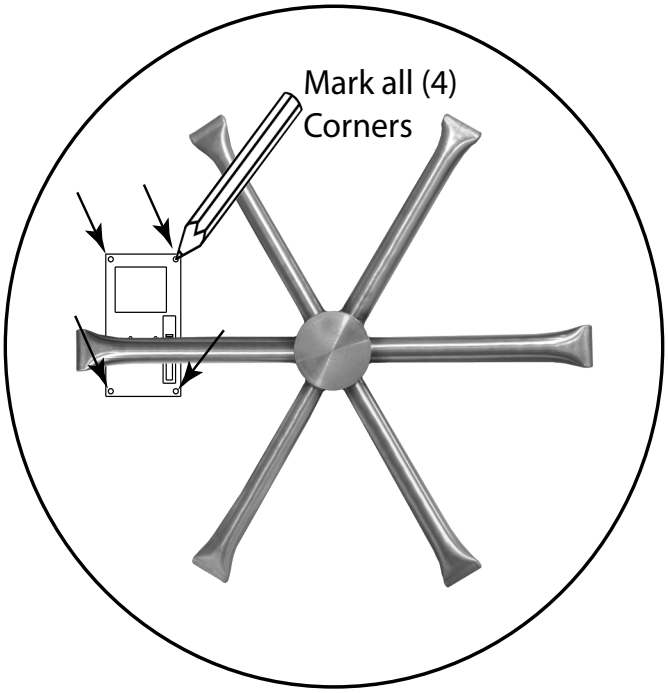

Fig.19 Shows marking AWS-PLATE to burner.

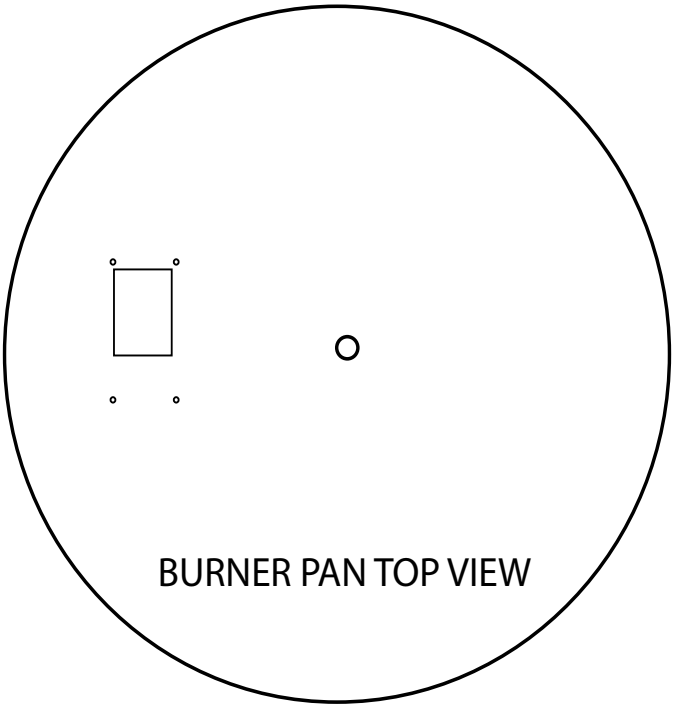

Fig. 21 Shows burner pan complete with holes cut out.

INSTALLING PILOT ASSEMBLY INTO AWS PLATE

Gather the pilot assembly ends and insert them into the square hole of the AWS plate as shown in Fig 22.

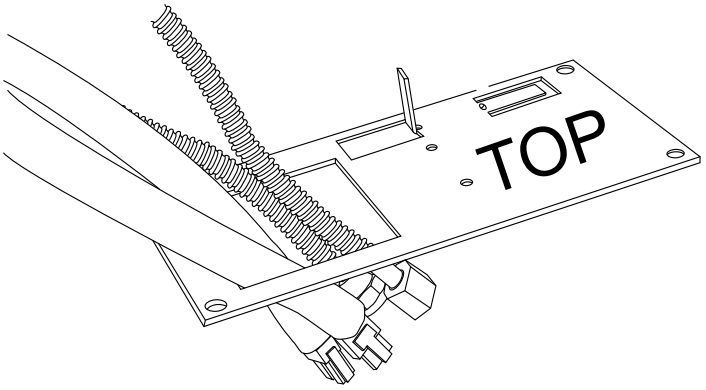

Fig. 22 Installing Pilot assembly into mounting plate

Align the pilot assembly plate to the mating holes of the AWS-PLATE and secure pilot assembly to the plate with two #8-18 x 1/2" hex screws (provided). See Fig. 23.

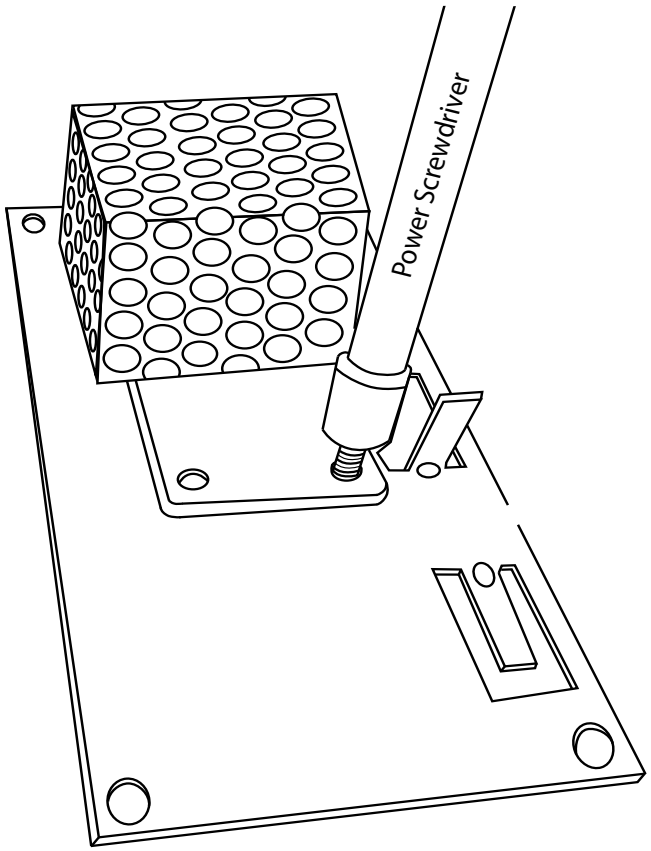

Fig. 23 Securing pilot assembly with two screws

After mounting the pilot assembly to the plate; install it into the bottom of the fire pit pan as shown in Fig. 24.

Use the four hex head self tapping screws with the kit and install the mounting plate with the new pilot assembly from the bottom of the burner pan. See Fig. 24.

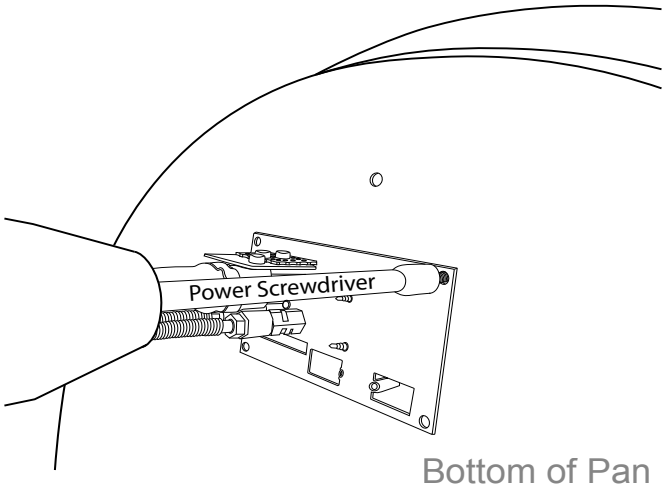

Fig. 24 Installing the mounting plate and pilot assembly to bottom of burner pan.

INSTALLING BURNER INTO BURNER PAN

Reinstall the burner into the pan or disc per Fig. 25. Ensure the burner leg is against the tab of the AWS-PLATE as previously prepared. Secure the burner against the pan with a nut and washer then install the orifice and shown in Fig. 25. Firegear Spur burner and orifice shown.
Note: The AWS valve is set up for ½" fittings. If your burner is ¾" you will need to provide a reducer to adapt to the valve box.

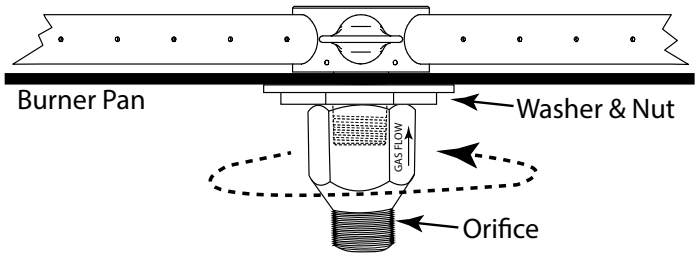

Fig. 25 Installing orifice to burner nipple.

CAUTION: Gas rated Teflon tape or pipe compound must be used on a NPT connections.

Propane (LP) installations require a 3" nipple installed into the burner before the LP orifice is installed. This helps prevent any back pressure of flames trying to exit through the vent holes in the orifice.

INSTALLING GAS VALVE TO BURNER

Turn the burner pan upside down and install the heat shield (Fig. 26). The heat shield will rest on the orifice. Place the cutout or notched section of the heat shield toward the pilot area in the burner pan. This allows for pilot tubing clearance on smaller pans. Install the brass nut (suppled with kit) on the OAS to secure the heat shield into place. Secure nut with an adjustable wrench.

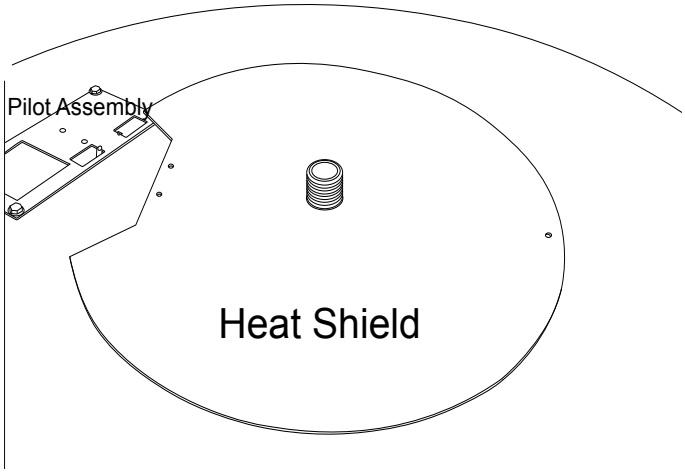

Fig. 26 Installing heat shield

Remove the plastic plug from the outlet side of the gas valve box and thread the female outlet to the male nipple of the OAS previously installed on the burner pan as shown in Fig. 27. Ensure the brass nipples and 4-PIN connector on the gas valve box are located toward the pilot area when securing gas valve into place (if possible).

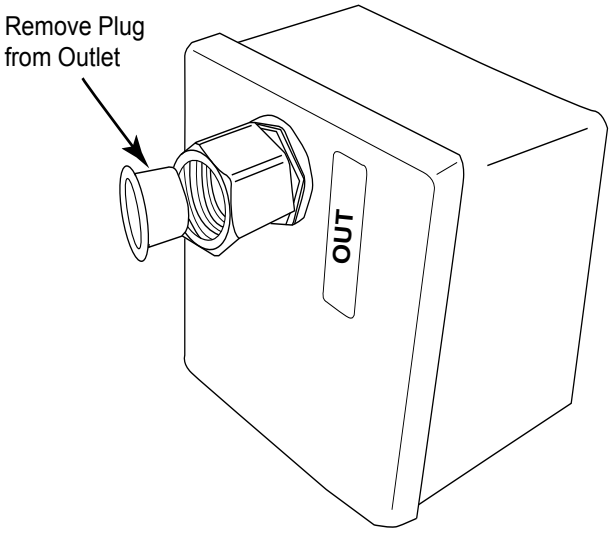

Fig. 27 Removing the plug from the Outlet end of the valve

Thread the Outlet side of the gas valve to the orifice and secure it into position. Ensure the brass pilot fittings are facing the pilot area for a convenient connection.

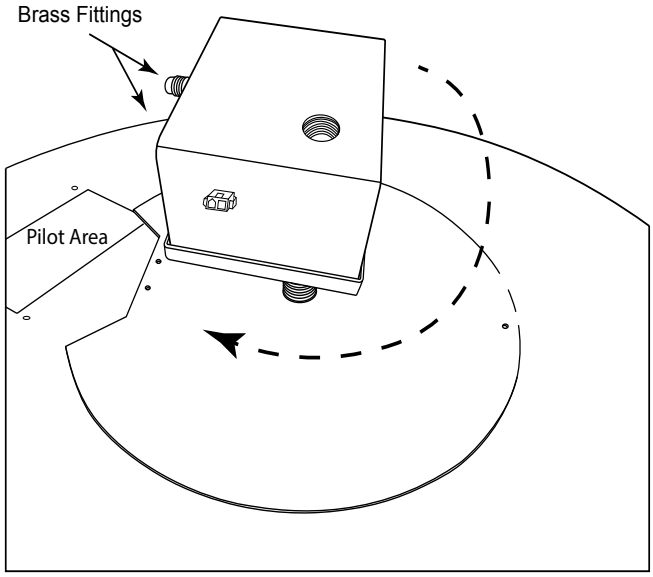

Fig. 28 Installing gas valve to orifice.

Install a 1/2” flare x 1/2” MIP fitting (U1-8D-S included) onto the inlet side of the gas valve box. Wrap the male NPT threads with gas rated Teflon tape or pipe compound before securing into position. See Fig. 29. This will enable a non-whistling flex line to be connected directly to the gas valve.

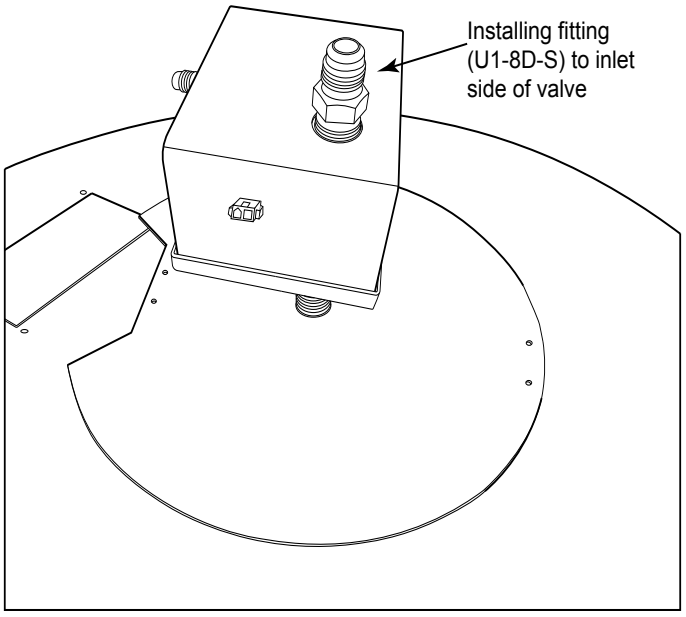

Fig. 29 Installing fitting into the inlet side of gas valve

The pilot assembly has two pilots inside the perforated hood. One uses a flared fitting to connect to the valve box and the other pilot uses a compression fitting. Secure both fittings to the valve box using a 9/16" open-end wrench for the flared fitting and a 1/2" open end for the compression fittings. See Fig. 30.

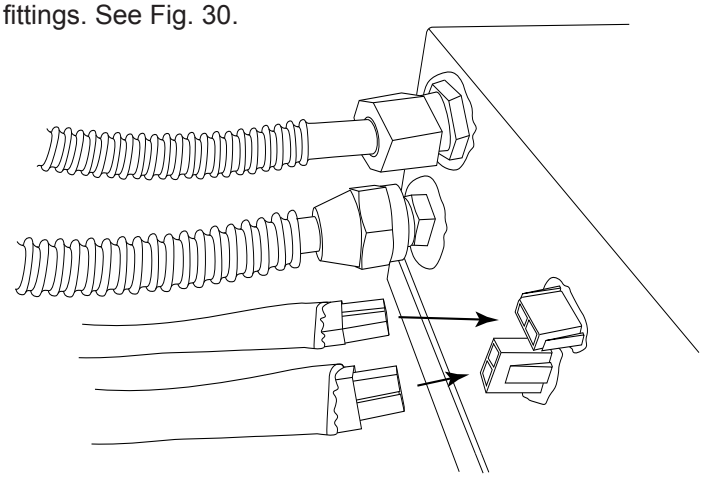

Fig. 30 Connecting pilot assembly to valve box.

Install the 2-PIN connectors (items #1 & #2 in Fig. 31) from the pilot assembly into the valve box, located next to the pilot assembly fittings. Ensure the connector locks into position. See Fig. 30. **Note:** Connectors are two different types to prevent incorrect connection.

Plug the red and black power supply wire, item #3, in Fig. 31 into the 2-PIN connector on the side of the valve box. Note the red sleeve on the positive wire when attaching the power supply.

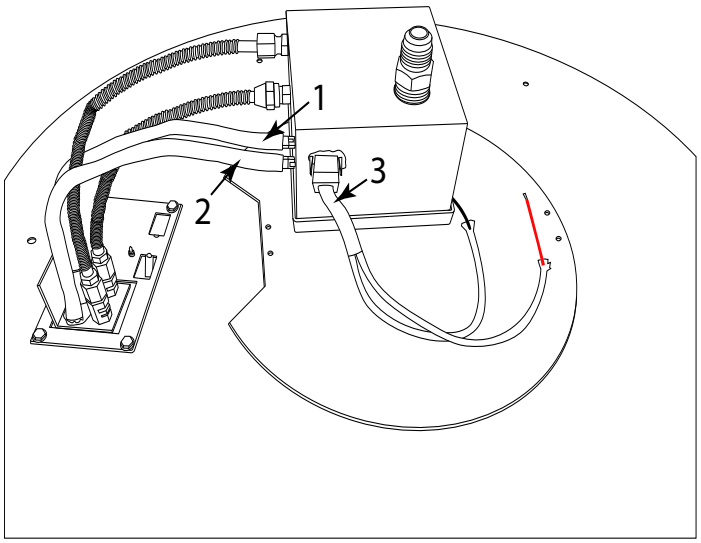

Fig. 31 Shows three 2-PIN connectors installed into valve box and the power supply wires attached to valve box.

INSTALLING MANUAL KEY VALVE

The key valve contents: (1) key valve, (1) 12-inch key and (1) flange. See Fig. 32. The valve requires a 1¼" round clearance hole in the non-combustible enclosure wall. See the instructions supplied with the key valve for more specific details. **Note:** Be sure to leak test all fittings before operating.

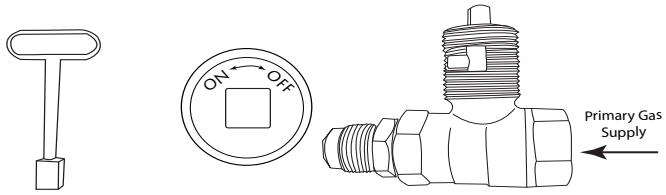

Fig. 32 Key valve components

Depending on the enclosure being used, the key valve can be installed in various methods. The flange threads onto the valve as shown and comes with one fitting to attach the flex gas line that is supplied with the fire pit. The primary gas line fitting (not supplied) is left up to the installer to supply depending on the connection needed for the installation See Fig. 33.

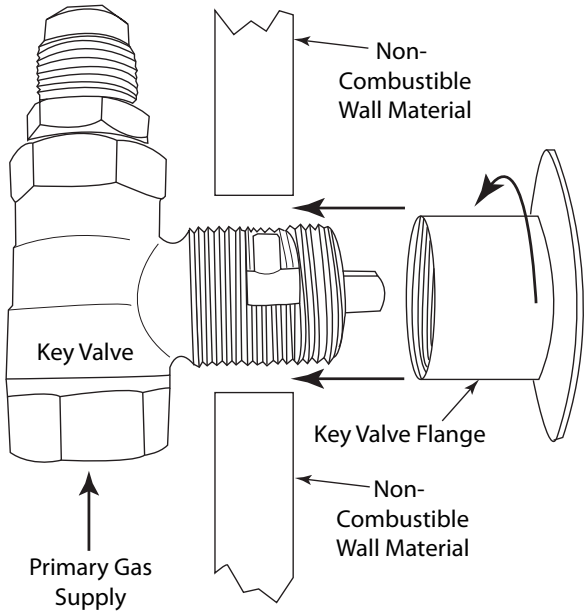

Fig. 33 Key valve components

Note: A 1¼" x 2" black iron or galvanized coupler/nipple (not supplied) can be used as a spacer between the manual valve and the non-combustible wall to add additional support to hold the manual key valve in place, if needed. See Fig. 34.

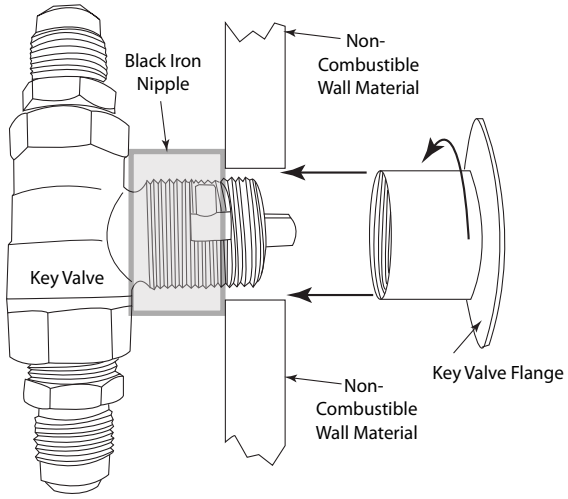

Fig. 34 Key valve using nipple as additional support

Before the fire pit is set inside the enclosure, install the 46" flex connector to the gas valve box and to the manual key valve.

INSTALLING POWER SUPPLY & REMOTE CONTROL

Install the GOE-30DCV power supply and FG-1420-AOD remote control as shown in the wiring diagram Fig 36, page 20. **Note**: Ensure the external antenna on the FG-1420-AOD receiver is outside the junction box.

This is a polarity sensitive system. There is a red sleeve attached to the positive (+) side of the DC power supply.

When wiring the remote control receiver, cut off both 1/4" terminals and strip both wire ends. Connect one red wire from the receiver to the GOE-30DCV power supply with the red sleeve; secure with wire nut. Connect the other red wire from the receiver to the + (positive) directly to the red wire from the gas valve control box; secure with wire nut.

Note: An extra red jumper wire is provided to extend either one of the red wires of the FG-1420-AOD remote control receiver (if needed). It is not required to use this wire. It depends on each application.

DO NOT CONNECT 120VAC DIRECTLY TO THE GAS VALVE WIRES -DAMAGE WILL OCCUR. THIS IS NOT COVERED BY WARRANTY.

Note: Use dielectric grease inside of all wire nut connections to protect from the outside environment.

Plug the GOE-30VDC power supply and remote receiver into the 120VAC GFI box. Install battery into the transmitter of the FG-1420-AOD and "learn" (program) the receiver to the transmitter. Ensure the slide switch on the receiver is in the REMOTE position See Fig. 35; Press and Release the "learn" button on the receiver. You will hear the receiver emit a short "beep". Once this occurs, press any button on the transmitter and the receiver will emit several rapid beeps confirming the two are programed together.

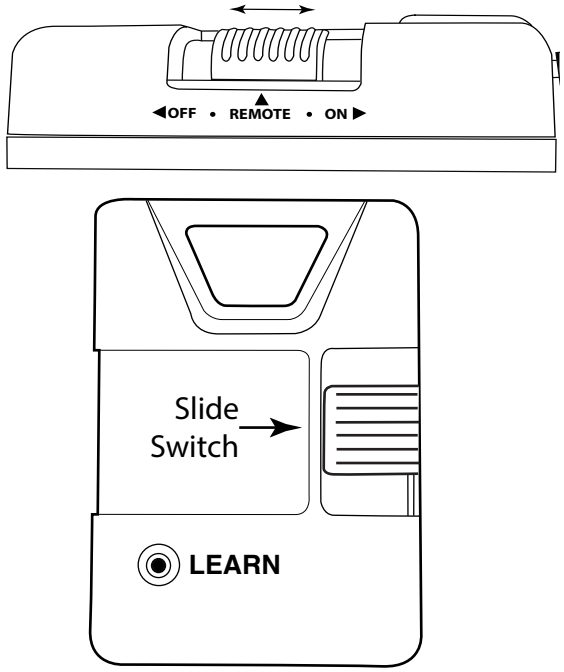

Fig. 35 FG-1420-AOD slide switch and learn button.

INSTALLATION OF MEDIA INTO BURNER PAN

Install lava rock or glass media into the burner pan. Ensure the lava rock is a minimum of 1-inch diameter for proper operation.

Note: Do not pour Lava Rock directly from bag. It should be placed naturally and NOT packed in tight. Loose fitting is important to ensure robust flames. Placing the lava rock in the pan by hand, ensures no excessive dust from bag lays in the bottom of pan and potentially plugs the burner port holes or the pan weep holes.

IMPORTANT: **DO NOT PLACE ROCK OR GLASS OVER TOP OR UNDER THE PILOT SCREEN COVER.** The screen must be free of any debris to ensure proper lighting of burner and good flame sense (See Fig. 36).

Cover the burner completely with media but do not make the depth greater than 1-inch over-top of the burner port holes.

Do NOT cover the top of mesh pilot hood with any rock or glass. It must be free an any debris to operate properly.

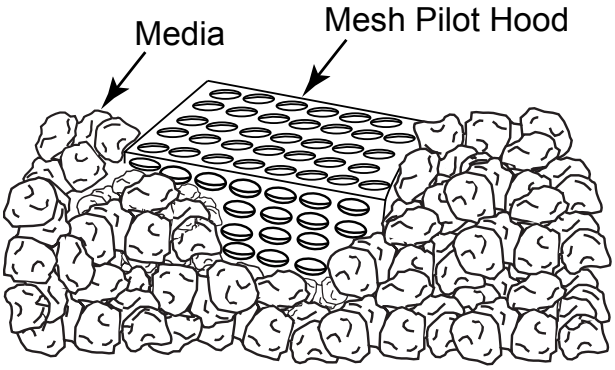

Fig. 36 Media placement around pilot hood.

Acceptable media placed over top of the burner:

Lava Rock Min.1”- 2” size
FG-LAVA-10 (10 LB)
FG-LAVA-50 (50 LB)

GL Glass Min. ½” - ¾” size
Various colors are available
See Product catalog for details
Sold in 5 LB bags or 8 bags to a case

GRL Reflective Glass
Min. ½” - ¾” size
Various colors are available
See Product catalog for details
Sold in 5 LB bags or 8 bags to a case

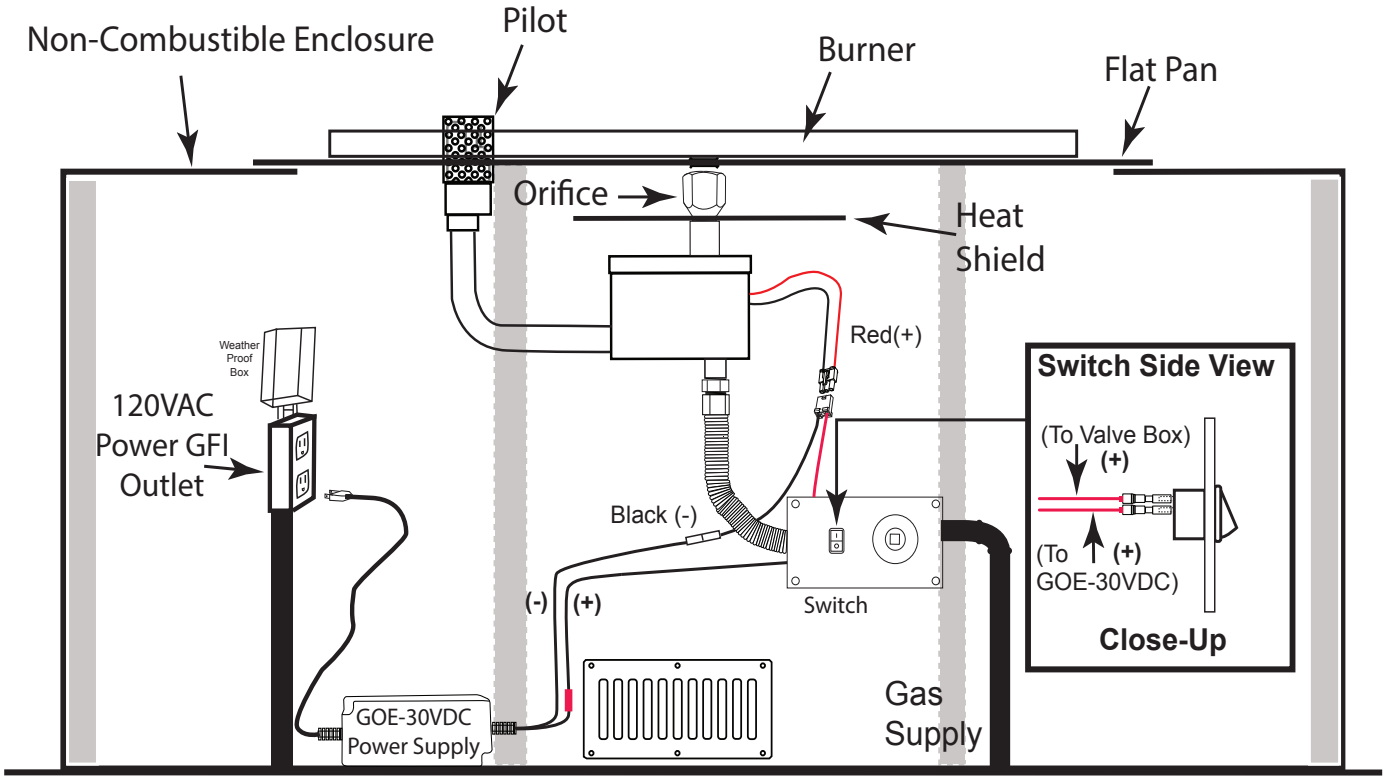

Fig. 37 Shows typical installation of fire pit using AWS system

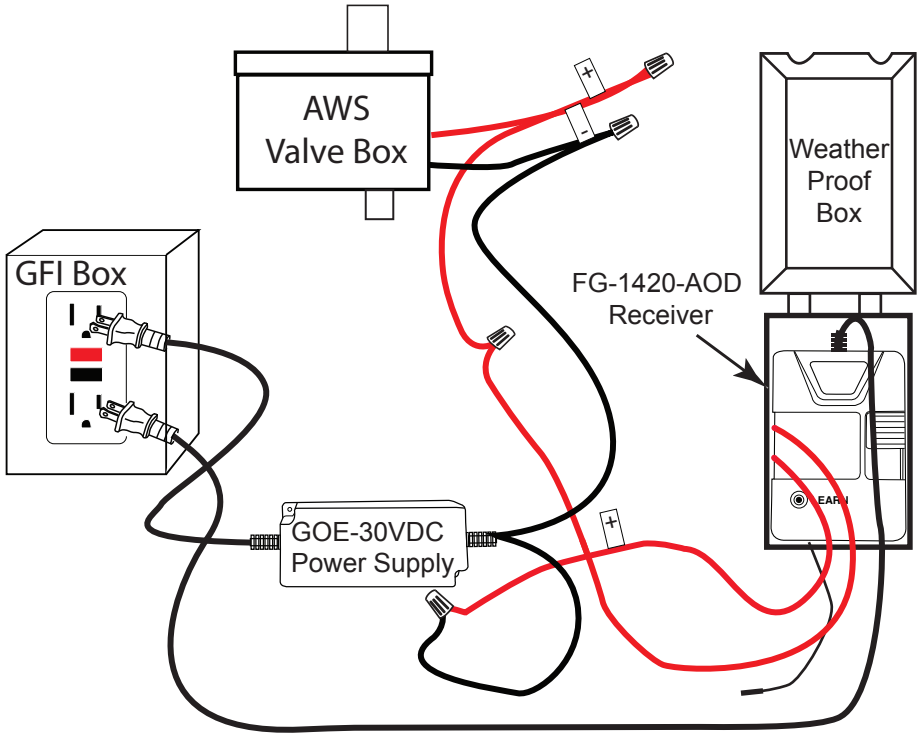

Fig. 38 Shows typical installation wiring with optional FG-1420-A-OD remote control.

OPERATION & LIGHTING

CAUTION: Children and adults should be alerted to the hazards on high surface temperatures and should stay away to avoid burns or clothing ignition. Young children should be carefully supervised when they are in the area of the appliance.

WARNING: Do not use this appliance if any part has been under water. Immediately call a qualified service technician to inspect the appliance and to replace any part of control system and any gas control, which has been under water.

SAFETY WARNINGS

1. Never leave the fire pit unattended during operation.
2. Clothing or other flammable materials should not be placed on or near the appliance.
3. Any guard or other protective device removed for servicing the appliance must be replaced prior to operating the appliance.
4. Installation and repair should be done by a qualified service person. The appliance should be inspected before use and at least annually by a qualified service person. More frequent cleaning may be required as necessary. It is imperative the control compartment, burners and circulating air passageways of the appliance be kept clean.
5. Inspect the fuel supply connection before each use of the appliance.
6. Temporary storage of this appliance indoors is permissible only if it has been disconnected from its fuel supply (Natural or LP gas line).

WARNING

1. This appliance is hot when operated and can cause severe burns if contacted.
2. Do not burn any solid fuels in this appliance.

READ ALL LIGHTING INSTRUCTIONS BEFORE ATTEMPTING TO LIGHT FIRE PIT

CAUTION: **ENSURE YOU HAVE LEAK TESTED THE FIRE PIT BEFORE OPERATING AND THE TRANSMITTER AND RECEIVER HAVE BEEN "LEARNED"(PROGRAMED TOGETHER) FOR WIRELESS OPERATION.**

WARNING: Do not stand over fire pit during ignition or operation due to high surface temperatures.

LIGHTING INSTRUCTIONS

TURNING ON FIRE PIT/FEATURE

Prior to turning the fire pit ON, visually inspect the fire pit to ensure debris such as leaves or other combustible materials have not collected on top of the fire pit, which could burn and emit embers once the fire pit is turned ON. At the same time, ensure anyone standing close to the fire pit is aware you are turning it ON and steps away, at a safe distance prior to lighting.

The ignition sequence is as follows:

1. Turn the manual key valve to the ON position.
2. Turn the fire pit ON by pressing the ON button of the remote control. The hot surface igniter will heat up and begin to "glow" in approximately 10 seconds.
3. Once the hot surface igniter heats up, the pilot gas valve opens, a "click" is heard, and gas is released to the burner, lighting the fire pit.

The entire ignition sequence ignites within 20 seconds or less. If not, press the OFF button on the remote control and wait 5 minutes before trying again.

TURNING OFF FIRE PIT/FEATURE

1. Turn the fire feature OFF by pressing the OFF button on the remote control (or switch/timer if applicable).
2. If you are no longer burning the fire pit until another time, we recommend turning the key valve to OFF position.

Multiple Fire Feature Installations Pool/Spa Certified

MULTIPLE (MORE THAN ONE) FIRE FEATURE PRECAUTIONS

When considering multiple fire features in an a predetermined area, preparation must be made ahead time to ensure the installations are per the instruction manual and acceptable to all local and national codes.

- All wiring sizing should be no less than 12-gauge or greater.
- One (1) FG-PS-30V320 power supply is required for every four (4) fire features OR any single fire feature within 5-feet of a pool or spa.
- The maximum distance the furthest fire feature can be from the power supply is 500-feet.
- Maximum allowable Btu's per fire feature is 290,000.
- Minimum Btu's with this system is 65,000. Ensure the proper gas pipe sizing is strictly applied. See page 7.
- An orifice is required for all fire features regardless of the gas type. The orifice limits the amount of gas flow to ensure the flame is at a safe level during operation.

SWIMMING POOL OR SPA APPLICATIONS

Installing near a swimming pool or Spa (within 5-feet) is acceptable if you abide by the following:

- Electronic Ignition System must be listed (certified) as a low voltage ignition system.
- The Firegear Outdoors (FG-PS-30V320) power supply is the only ignition system certified for use with submersible swimming pool and spa lights has to be labeled as such.
- Power Supply must not exceed 15VAC or 30VDC.
- The Power Supply Junction Box AND Gas Pipe must be bonded using 8AWG or larger copper bonding conductor.

The Firegear Outdoors AWS system is available in a 30VDC version and comes with a 30VDC Power Supply certified for use with submersible swimming pool and spa lights.

Note: January 1, 2018 the National Electrical Code (NFPA 70) 2017 changes took affect stating the installation approval of "Low Voltage Gas Fired Fireplaces, Fire pits and Similar Equipment" also known as "Automated Fire Features" being installed close to a pool (within 5-feet).

FIRE FEATURE ON/OFF OPTIONS

Fire features can be turned ON/OFF via electricity. When power is applied the fire feature turns ON, when power is removed it turns OFF. Below is a list of possible devices to the Automatic Fire Feature ON and OFF.

Model: FG-WS-OD - A simple ON-OFF wall switch that controls the 120VAC power to the power supply to operate the system. Mounted in weatherproof box with cover.

Model: FG-TIMER 2HR - Mechanical (wind-up) or digital timer that turns the 120VAC control the power to the power supply. Mounted in weatherproof box with cover.

Model: FG-EMER-STOP - This emergency stop can be used as a secondary method to turn the fire feature ON/OFF or it can be use as the primary means to turn the fire feature ON/OFF. Commercial projects usually require this to enable anyone close by the ability to turn the fire feature OFF. Mounted in weatherproof box with cover.

Model: FG-1420-AOD - A remote control kit with the receiver mounted into a weatherproof junction box tied into the 120VAC power supply and a transmitter to turn the fire feature ON and OFF.

Model: AF-4000HAT Pool/Home automation system link (works with most manufacturers systems).

Swimming Pool Controller - If your fire feature is near a pool and the pool will be operated by a pool controller (i.e. Pentair Intellitouch or Jandy Aqualink) you can also turn your fire feature ON and OFF using these controllers. See your pool contractor about this option for more information.

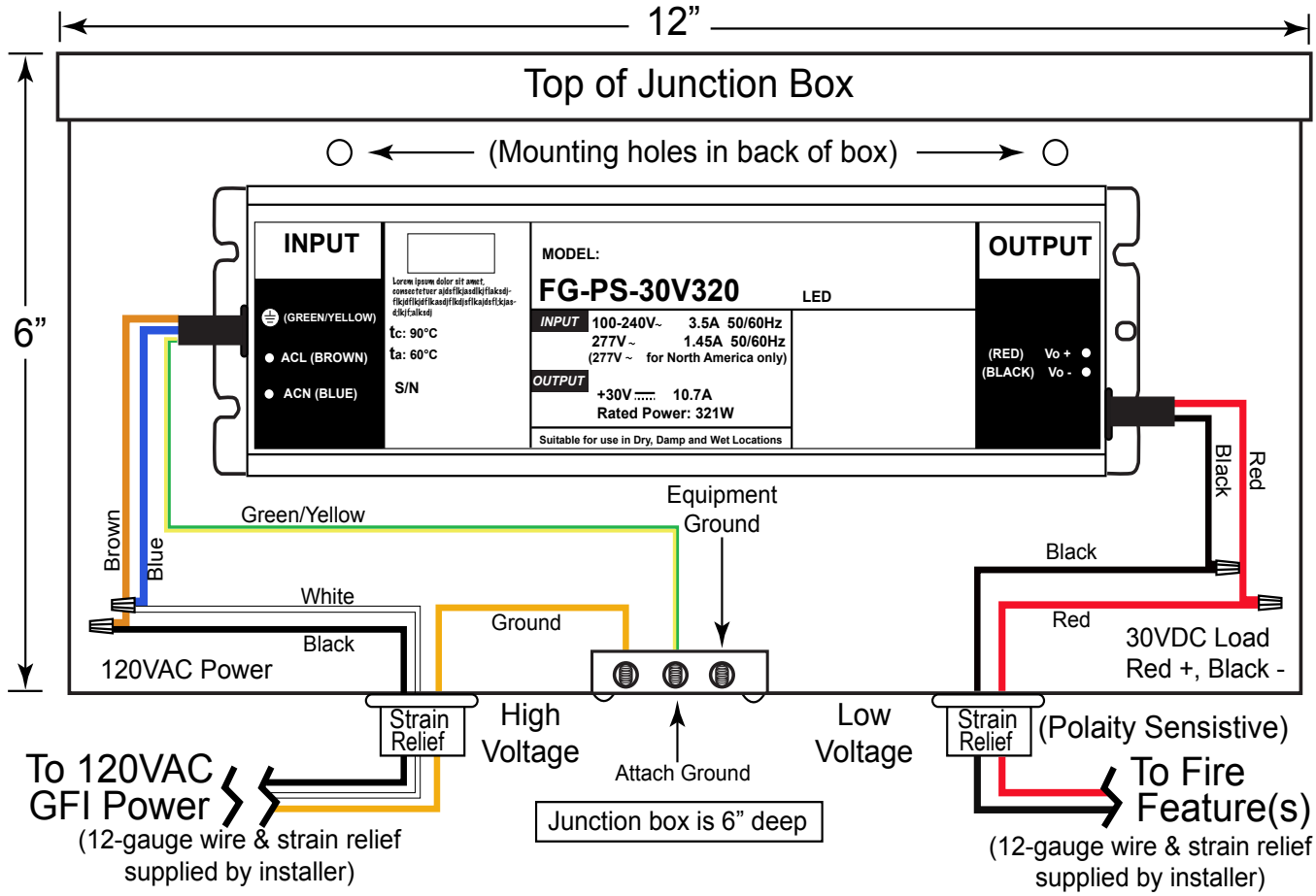

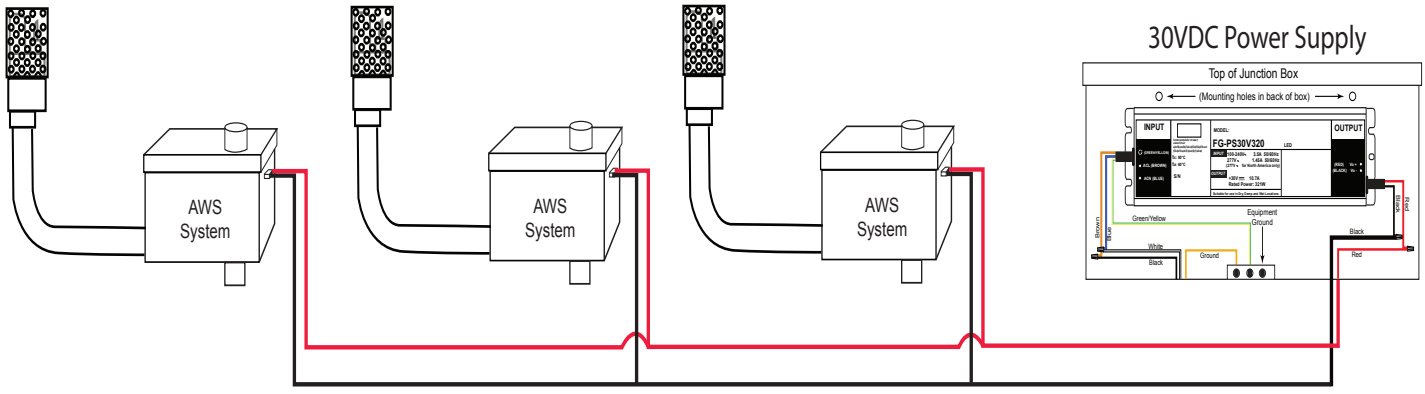

Fig. 39 Shows a multiple installation known as a “Daisy Chain”. This installation maintains polarity for all fire features operating from a FG-PS-30V320 power supply.

Fig. 38 Shows the FG-PS-30V320 power supply that must be used for more than one fire feature and up to a total of four. It must also be used for a single fire feature if it will be installed next to a pool within 5-feet.

Polarity Between Fire Features in a Daisy Chain – when daisy chaining multiple features together, wire polarity BETWEEN the features MUST be the same. **Note**: Maximum of (4) fire features with each FG-PS-30V320 power supply.

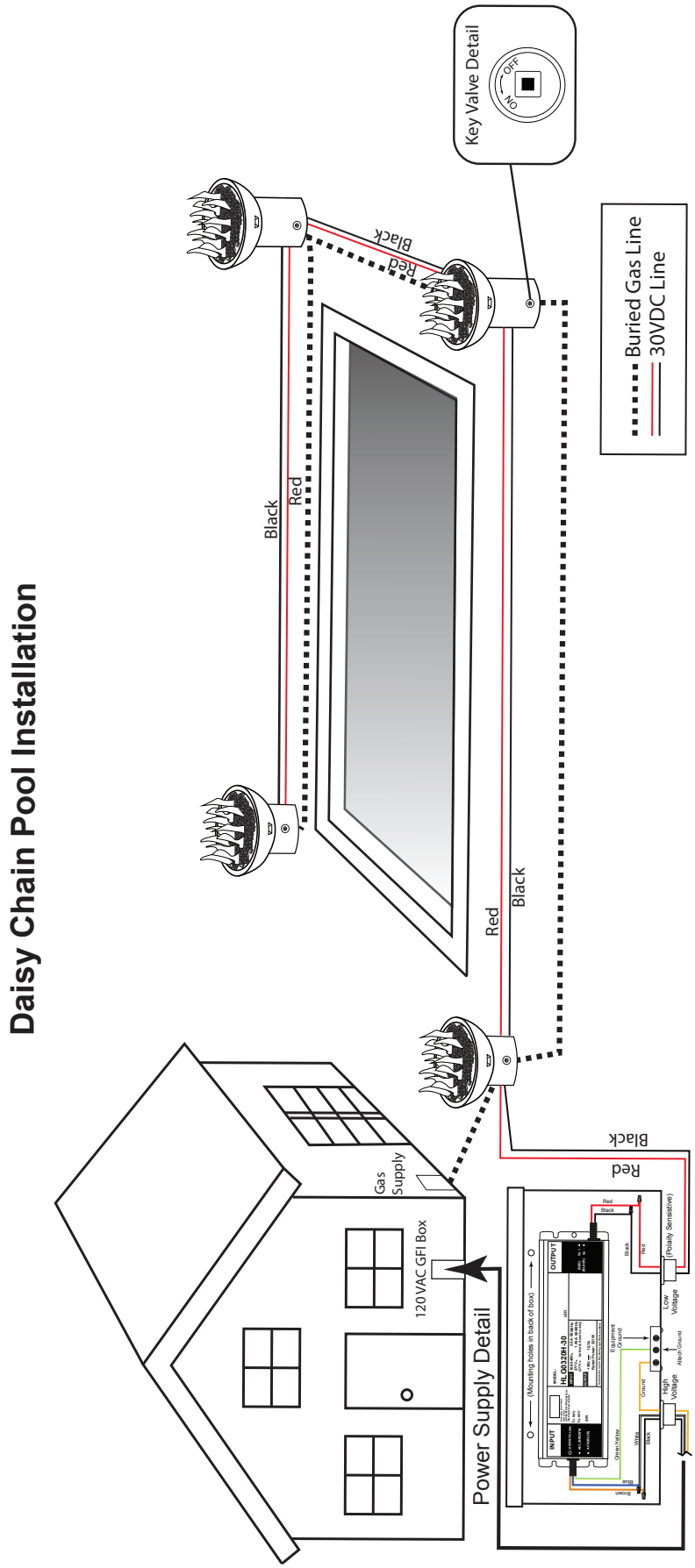

Fig. 40 Shows installation with the maximum four (4) fire features installed surrounding a swimming pool.

- The FG-PS-30V320 power supply must be used.
- The gas line must be configured by a licensed plumber to ensure you have adequate gas pressure for all four fire features.

PRE-INSTALLATION CHECK LIST FOR MULTIPLE FIRE FEATURE INSTALLS

GAS INFORMATION

Gas Volume - Ensure the correct size pipe is used for the total gas load. If installing more than one fire feature, ensure the correct size pipe is based upon the distance of the furthest fire feature away and the total gas load is for all gas appliances on that gas line (i.e. fire feature, BBQ, torches, etc.).

Gas Pressure & Type of Gas - What is the gas pressure being supplied to the fire features? Is the fire feature(s) configured for the proper gas type? The AWS gas valve is shipped for Natural gas (NG). To convert to Propane (LP) gas, the secondary pilot orifice must be changed.

Manual Shut-off/Key Valve - Is there a manual shut-off or key valve installed within 6-feet of the fire feature? Did you verify proper distance with local and national codes?

Purging a New Gas Line - Has the gas line been purged of both air and possible debris? Any gas lines buried underground must be pressure tested up to 60PSI to ensure no leaks. After inspection is complete, most plumbers will release pressure in the line at one location by opening the manual ball/key valve. It is recommended to release pressure by opening a ball/key valves associated with all the fire features. ***Example***: There are four fire features on a job, open the first key valve for a few seconds, then close it. Then move on to the next key valve and do the same thing until you have purged the debris out of all four gas lines.

Main Burner Orifice - All fire features **MUST** have a main burner orifice installed on the outlet side of the gas valve. An orifice limits the amount of gas flow to the burner to ensure the flame is a safe and reasonable height to not pose a risk to people or property. The drawings below show the difference between a Natural gas (NG) and Propane (LP) orifice. Because (LP) gas does not burn as clean as (NG) and requires ventilation holes at the base of the orifice to provide a cleaner flame. See Fig. 41.

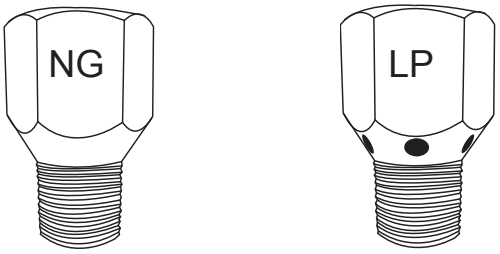

Fig 41. Natural (NG) orifice on left; LP with vent holes on right.

ELECTRICAL INFORMATION

Wire Gauge - Is the wire gauge correct? Wiring must be 12AWG or greater (solid or stranded) for all installations. **Note:** It is recommended to fill the wire nuts with either dielectric grease or silicone prior to installing the wire nut. This will ensure a waterproof connection.

Power Supply - Firegear Outdoors offers two power supplies for use with the fire features. Each power supply requires 120VAC power to operate and converts it to 30VDC to operate the gas valve. **DO NOT CONNECT 120VAC DIRECTLY TO THE GAS VALVE WIRES - DAMAGE WILL OCCUR.**

Why GFI circuit? A GFI is a type of circuit breaker which shuts off electric power when it senses an imbalance between the outgoing and incoming current. It protects the house wires and receptacles from overheating and possible fire.
The FG-PS-30V320 can be used for one or a maximum of four fire features. The maximum distance the furthest fire feature can be from the power supply is 500-feet.
In addition, the FG-PS-30V320 model enables a fire feature to be installed within 5-feet of a pool or spa.

Daisy Chain (More than one) Wiring - Whether you are installing two or more fire features, the polarity between the each **must be the same.** See Figs 39 & 40, pages 24 and 25.
Bonding - Gas lines must be bonded AT EACH fire feature. (Refer to National Electric Code 2017 Section: 680.26(B).

MEDIA INFORMATION

Acceptable media placed over top of the burner:

Lava Rock 1”- 2” size
FG-LAVA-10 (10 LB)
FG-LAVA-50 (50 LB)

GL Glass ½” - ¾” size
Various colors are available
See Product catalog for details
Sold in 5 LB bags or 8 bags to a case

GRL Reflective Glass ½” - ¾” size
Various colors are available
See Product catalog for details
Sold in 5 LB bags or 8 bags to a case

DRAINAGE INFORMATION

For any fire feature ABOVE ground level requires a drain line or a way for water to exit the fire feature.

Note: This AWS system is not approved to be installed BELOW ground level.

1

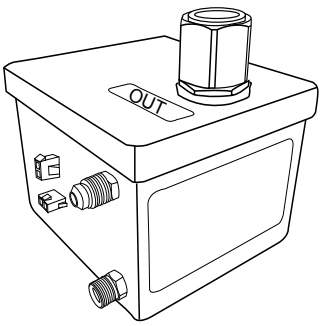

2

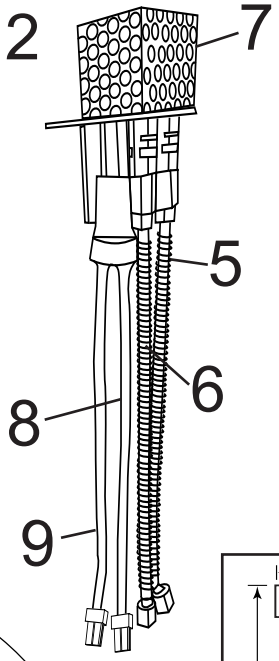

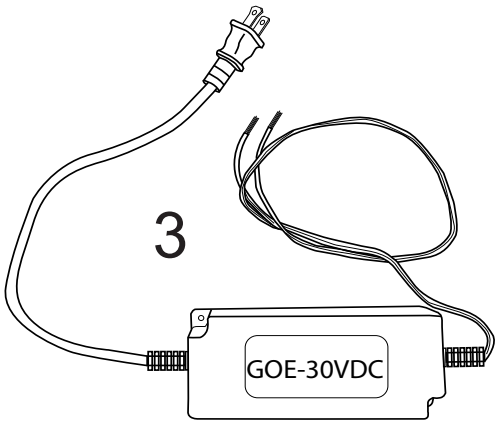

Items are not to scale

4

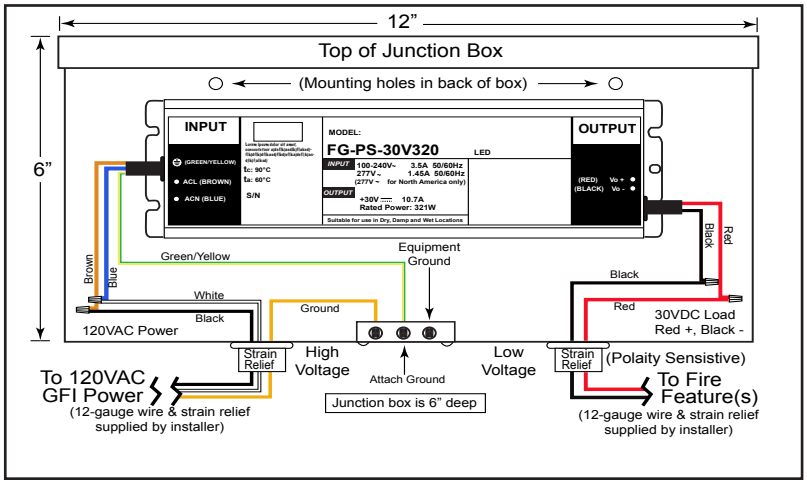

14

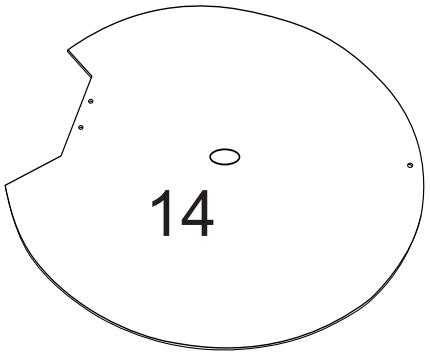

11 12 13

16

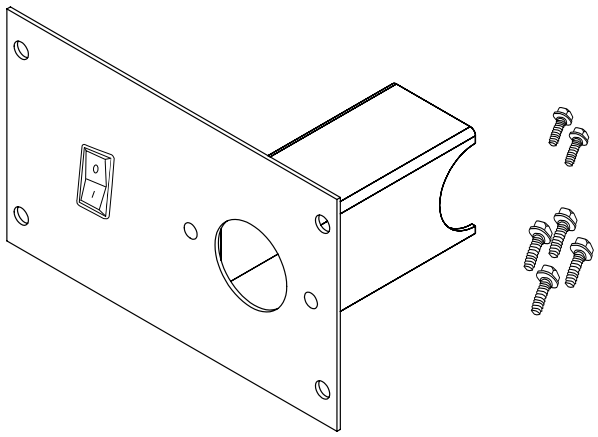

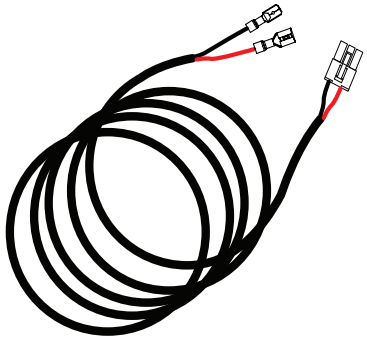

17

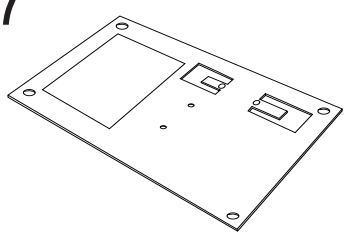

15

Item	Description	Qty.	Part Number
1	Ignition Control Box (Valve box only)	1	FG-ICB
2	Pilot Burner Assembly (Complete pilot assembly and wires)	1	FG-PBA
3	30VDC Power Supply for single fire feature (10-feet from pools)	1	GOE-30DCV
4	30VDC Power Supply in NEMA approved box for multi fire feature installs; including pool/spa installations	1	FG-PS-30V320
5	Primary Pilot Burner Gas Line (24-inch)	1	FG-PPBG
6	Secondary Pilot Burner Gas line (24-inch)	1	FG-SPBG
7	Pilot Burner Cage (hood)	1	FG-PBC
8	Thermopile - for primary pilot assembly	1	FG-TP
9	Hot Surface Ignition - for pilot burner assembly (item #2)	1	FG-HSI
10	Propane (LP) Pilot Burner Orifice - for LP applications (not shown)	1	FG-PBO-LP
11	AWS Power Wire to Valve (not shown)	1	10626
12	Key Valve Faceplate and Switch	1	78130
13	Weatherproof Rocker Switch	1	WP-SWITCH
14	Heat Shield	1	FG-HEATSHIELD
15	½" NPS Bass Nut (secures heat shield)	1	105-8
16	30-Volt Power Wires for Gas Valve (12-inch)	1	FG-POWERWIRES
17	Pilot Assembly Mounting Plate	1	PLATE-AWS
18	10-24 x ¾" SS Thread Cutting Screw (not shown)	4	10409
19	8-18 x ½" Hex Head Self Tapping Stainless Screw (not shown)	2	31802
20	½" Flare x to ½" MIP (no shown)	1	U1-8D-S

Valve Box Reference

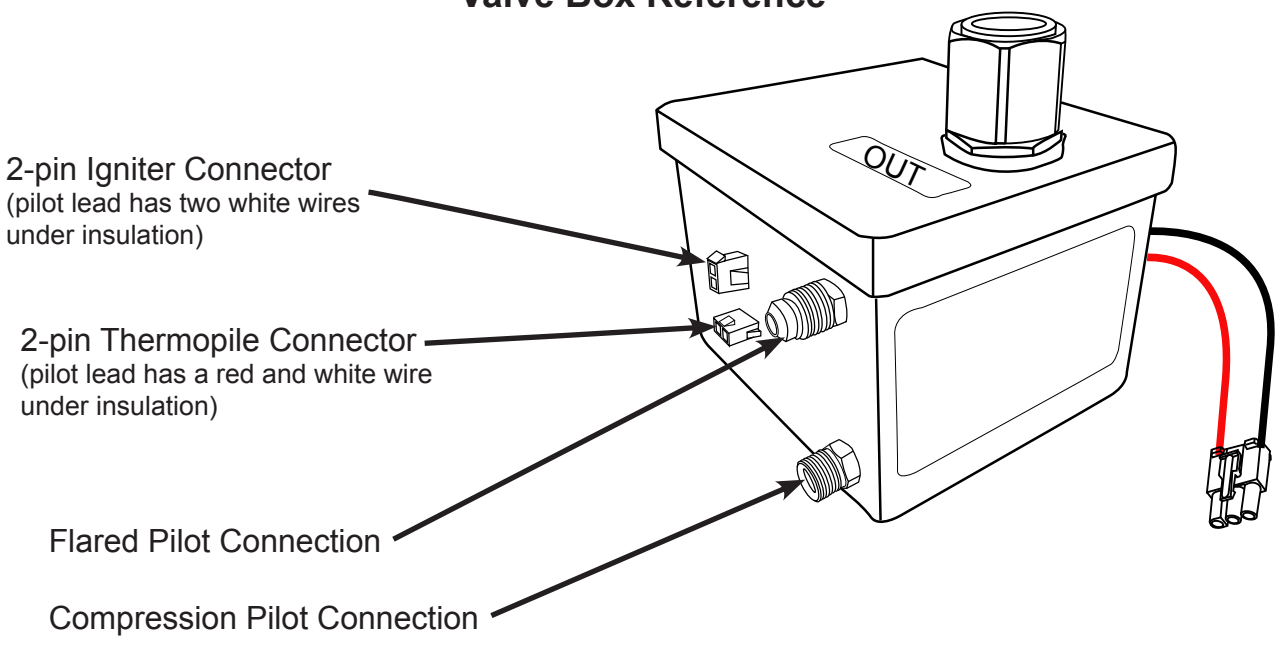

Sequence of Operation

Fire Feature Turned ON

↓

First Pilot with Hot Surface Igniter Heats Up and Glows (Approx. 10 seconds)

↓

Secondary Pilot Opens; "Click" is Heard; Gas is Released to Burner

↓

Fire Feature is Lit Until Turned OFF

The system is designed to relight itself if blown out. It will try (3) times to relight before it goes into a "hard" lock out. Then it must be turned OFF and back ON to reset it .

START UP ISSUES

1. Turned the Fire Feature ON... but nothing happens.

- **No Power** - Check for power at the fire feature(s). Confirm proper power is being supplied to the system. 30VDC from power supply to valve and 120VAC volts where power supply is plugged into.
- **Defective Controller** - If 120VAC power is connected directly to the gas valve, the controller inside the valve box will be damaged. It this happens, a burned electrical smell might be present - replace controller.

2. Glow Plug does not glow.

- **Connector Not Plugged In Correctly** - Check the 2-Pin connector from pilot to the gas valve, Ensure it is plugged into place with the locking latch.
- **Pins Not Secure** - Check the pins inside the 2-pin connector, ensure they are not loose. If loose push them back in until tight and try system again.
- **Possible Defective Igniter** - Unplug the igniter and check resistance across the two pins inside the plastic housing coming from the pilot assembly. Use a multi-meter to check resistance. Resistance should be 2.6 - 3.4 ohms. If no resistance or resistance greater than 8 ohms indicates a defective igniter.

3. Glow Plug Glows, But Does Not Ignite the Gas

- **Insufficient Power** - If the glow plug is not getting enough power, it will not get ignite the gas.
- **Thin Wire** - The recommended minimum wire gauge is 12AWG . If wire is less than 12-gauge there may not be enough power to get the igniter hot enough.
- **Too Many Fire Features On Daisy Chain** - If more than 4 fire features are used there will not be enough power to get the igniter hot enough.
- **No Gas** - Was the gas line purged of air. If gas line was not bled it may take a while before the gas gets to the fire feature.
- **Manual Shut Off Valve** - Is the manual shut-off or key valve open?
- **Debris** - Debris can get trapped inside the screen of the gas valve. Excessive amounts of pipe dope or Teflon tape and restrict gas flow.
- **Debris in Pilot Burner** - New gas lines, until bled, have air and will have some debris. Ensure gas it turned OFF and electrical is unplugged. Remove the two brass fitting from the gas valve, then use “canned air” to blow through the pilot outlets.
- **Wrong Pilot Orifice** - If the wrong pilot orifice is installed into the primary pilot it will not light.
- **Oxygen Starvation** - To ignite gas we need oxygen, fuel and a heat source. If the pilot assembly is buried underneath the glass media or lava rock it will not allow the pilot to light.
- **Weak Igniter** - The glow plug will have slight differences causing some igniter’s burn hotter than others. If this occurs, the symptom will always be the same - inconsistent or no ignition at all. In this case, replace the pilot burner.

4. Pilot Lights, But No Flame to the Main Burner

- **Valve Box Installed Backwards -** Check the label on the gas valve box and ensure the burner is connected to the OUTLET side of the gas valve box.
- **Thermopile Pins Not Secure** - Check the pins in the pilot burner connector, remove it from the gas valve and check for loose pins. If loose, push inward until tight and try again. If this happens, the glow plug will stay ON for up to 30 seconds before turning OFF. It normally shuts off in about 5 seconds.
- **Defective Thermopile** - If a product is used consistently for extended periods of time a thermopile will degrade over time from the consistent use. Simply loosen the thermopile from the pilot assembly and slide it out. If it will not slide out because is it too tight, then it will need to be replaced.
- **Debris** - Debris can get trapped inside the screen of the gas valve. Over time rust and other debris can restrict the gas flow on the Outlet screen of the valve that can partially or sometimes even stop the flow. Inspect the screen, remove it and clean it then replace it.
- **Defective Controller or Main Gas Valve** - If you have inspected the thermopile connections and no debris is on the controller or gas valve; checked the power, then the gas valve or controller may be defective and will need replaced.

5. Fire Features Lights... Turns OFF Within A Few Seconds... and Restarts Again (Keeps repeating this sequence)

- **Gas Volume Insufficient -** When initially turning ON the fire feature pilot is lit and there is enough gas for the pilot to light, however once main gas valve is turned ON, the flow of gas to pilot drops not providing enough gas to keep the thermopile hot enough therefore the pilot will drop out and relight. This is usually caused by insufficient Gas Volume and can be caused by installing gas pipe too small to deliver proper amount of gas or by installing a Manual Gas Shutoff (Ball valve or Key Valve) with a capacity that is too small to allow enough gas to pass through to the feature.
- **Main Burner Orifice Not Installed** - Ensure the correct orifice is being used. If using LP gas it should have vent holes, Natural gas does not. See Fig. 3, page 8. The orifice/air mixer restricts the amount of gas flowing to the Main Burner. This restriction ensures that not ALL the gas will flow to the Main Burner, so there is still enough gas left for Pilot Burner.
- **Oxygen Starvation** - If the pilot assembly is buried underneath the glass media or lava rock it will not allow the pilot to light.
- **Defective Thermopile** - See Symptom 4 (above) for Defective Thermopile.
- **Defective Controller** – If your plumbing is supplying enough gas, the Main Burner orifice is installed, the Pilot Burner is getting plenty of air and the Thermopile is not defective the only thing left is a Defective Controller inside the valve box. If you have a Defective Controller the only way to fix it is to replace it.

6. Fire Feature Cycles (Turns On and Off) Every Few Minutes

- **Polarity Between Fire Features in a Daisy Chain** – when daisy chaining multiple features together, wire polarity BETWEEN the features MUST be the same.
- **Gas Volume Insufficient** – See symptom 5 page 30 for “Gas Volume Insufficient” for detailed explanation.
- **Oxygen Starvation (Pilot Burner)** – See symptom 5 page 30 for “Oxygen Starvation” for detailed explanation.
- **Defective Thermopile** – See symptom 4 page 30 for “Defective Thermopile” for detailed explanation
- **Defective Controller** – See symptom 5 page 30 for “Defective Controller” for detailed explanation

7. Main Burner Flame Lazy/Small or Flame NOT Spread Out Over Entire Burner

- **Gas Volume Insufficient** – See symptom 5, page 30 for “Gas Volume Insufficient” for detailed explanation
- **Debris On Inlet Screen; Valve Box** – See symptom 3, symptom 4, page 30 for “Debris on inlet screen for detailed explanation
- **Debris On Outlet Screen; Valve Box** – See symptom 4, page 30 for “Debris on Outlet Screen for detailed explanation.
- **Obstruction In Plumbing Between Gas Valve Outlet and Main Burner** – If your plumbing was sized correctly to deliver the proper amount of gas and the screens in the valve box are clean, inspect the plumbing between the valve and the burner for obstructions. Also, inspect inside the burner inlet to ensure no obstructions in there as well.

8. Main Burner Flame “Flares Up” Every Few Minutes

- **Fire glass/Media Layer too Thick** – Fire glass/media comes in different sizes. Use only ½” - ¾” diameter or larger. If you put a thick layer of fire glass/media on top the burner, over 1” in depth; there is a good chance some of the gas will get “trapped” within the media while the feature is ON. When this happens, the trapped gas in the fire feature ignites and you see the “*Flare Up*” effect. Remove some of the fire glass/media from the burner to see if this fixes the problem.
- **Gas Leak** – Natural Gas (NG) is lighter than air therefore when released into the atmosphere it rises. If you have a Natural Gas fire feature and there is a gas leak the Natural Gas (NG) will rise to the top of the feature. Once it encounters the flame a flare up will occur. Propane is heavier than air so if there is a gas leak when using propane the gas will fall into the bottom of the feature. That is why it is REQUIRED drainage/ventilation be installed at the bottom of the feature when using Propane. You do NOT want Propane accumulating inside the fire feature.

SHUTDOWN ISSUES

9. Turn the Feature OFF…but a Small Flame Continues to Burn in the Pilot Burner

- **Leak in the Pilot Burner Gas Valve** – When debris enters the gas valve by way of either the Inlet or outlet there is a chance some of that debris will enter the Pilot Burner Gas Valve and contaminate the seal inside the valve. If this occurs, the possibility exists the valve will not seal properly when turned **OFF** thereby allowing a small amount of gas to flow even after turned OFF. Often this will result in a small flame that continues to burn in the Pilot Burner after the feature has been turned OFF.

10. Turn the Feature OFF…But Small Flames Continue to Burn Out the Main Burner

- **Leak in the Main Burner Gas Valve** - when debris enters the gas valve by way of either the Inlet or Outlet there is a chance some of that debris will enter the Main Burner Gas Valve and contaminate the seal inside the valve. If this occurs the possibility exists the valve will not seal properly when turned off thereby allowing a small amount of gas to flow even after turned off. Often this will result in a small flame that continues to burn on the Main Burner after the feature has been turned OFF.

OPTIONAL ACCESSORIES

The following accessories are available from your local Firegear Outdoors dealer/distributor.
Each accessory comes with a separate installation manual. Read each instruction thoroughly before installing.

<table>
<tr>
<td>

Stainless Round Pans
Models:
PAN-SS25R - 25” Inside Dimension
PAN-SS29R - 29” Inside Dimension
PAN-SS33RP2 - 33” Inside Dimension

Stainless Round Flat Disc
Models:
PAN-SS26D - 26” Outside Dimension
PAN-SS29D - 29” Outside Dimension
PAN-SS34D - 34” Outside Dimension
PAN-SS44D - 44” Outside Dimension

</td>
<td>

Stainless Square Flat Disc
Models:
PAN-SS25SF - 25”x 25” Outside Dim.
PAN-SS30SF - 30”x 30” Outside Dim.
PAN-SS34SF - 34”x 34” Outside Dim.
PAN-SS40SF - 40”x 40” Outside Dim.
PAN-SS46SF - 46”x 46” Outside Dim.

</td>
<td>

Vent Kits
Model: VENT-KIT-6X12SS
(provides 18 sq. in of ventilation per side of enclosure)

Paver Vent Kits
Model: PAVER-VENT-4LNTS
Model: PAVER-VENT-6LNTS
(provides 18 sq. in of ventilation per side of enclosure when using pavers or SRW walls)

Glass Windshields
See catalog for a windshield to fit your application.

</td>
</tr>
<tr>
<td>

Shut-Off Valves
Model: 01-387 ⅜” OD Flare x ½” FIP
Model: 01-487 ½” OD Flare x ½” FIP

</td>
<td>

Log Sets
Model:
L-SF (Spit Fire) - 17pc (52lbs)
L-BF (Beach Fire) 8pc (20lbs)
L-Sedona (Sedona) 19pc (200lbs)
326-930 Twigs 6pc (20lbs)
Note: When installing log sets on fire features additional support of the burner pan may be necessary.

</td>
<td>

FlexFrame

Model: FLEXFRAME-SS (2pc.)
FLEXFRAME-SS3 (3pc.)

Universal brackets to support fire pit when using paver blocks or other non-combustible enclosures.

</td>
</tr>
<tr>
<td>

Burning Spur Kit (6 leg burner)

DBS-12K - 12” stainless steel burner
DBS-16K - 16” stainless steel burner
DBS-22K - 22” stainless steel burner
DBS-31K - 31” stainless steel burner
DBS-36K - 36” stainless steel burner

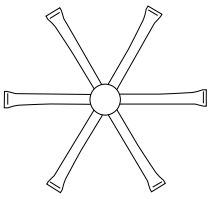

</td>
<td>

Fire Ring Burner Kit (round ring)

FG-FR-6SSK - 6” stainless burner
FG-FR-12SSK - 12” stainless burner
FG-FR-18SSK - 18” stainless burner
FG-FR-24SSK - 24” stainless burner
FG-FR-30SSK - 30” stainless burner
FG-FR-36SSK - 36” stainless burner
FG-FR-48SSK - 48” stainless burner

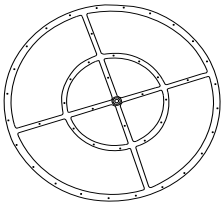

</td>
<td>

H-Style Burner Kits (linear)

FG-H-24SSK - 24” stainless burner
FG-H-30SSK - 30” stainless burner
FG-H-36SSK - 36” stainless burner
FG-H-48SSK - 48” stainless burner

H-Burner Side View

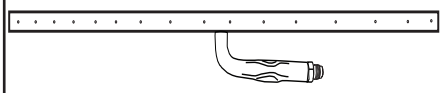

</td>
</tr>
</table>

NOTE: See the Firegear catalogue for a variety of fittings and flex connectors also available.

OPTIONAL ACCESSORIES

Emergency Stop (Emergency shut-off valve) **Model:** FG-EMER-STOP (includes J-Box and weatherproof cover) 	*ON-OFF Switches* **Model:** FG-WS-OD (On-Off Wall Switch; includes J-Box and weather-proof cover) **Model:** FG-1420-AOD (Remote Control; includes J-Box and weatherproof cover) 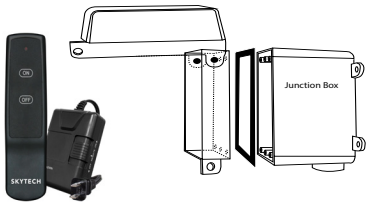 	*Key Valve* **Model:** KV-PC-12 High capacity straight valve with polished chrome cover and 12” key. Rated for 350,000Btu’s @ ½” PSI 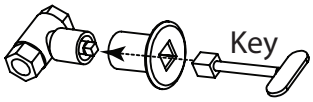
Timer (*Me*chanical gas timer) **Model:** FG-TIMER- 2HR * Includes weatherproof J-box and cover 	*LP Conversion Kit* **Model:** FG-AWS-PBO-P Contains primary pilot orifice (FG-PBO-LP) to convert Natural gas to LP gas. **Note:** In addition, the main burner orifice to be changed to an L.P. orifice (purchased separately from supplier)	

FOR TECHNICAL SERVICE, CALL:

Firegear Outdoors, an Earthcore Industries Brand
1600 Riverfork Drive
Huntington, IN 46750
260-388-5653
techsupport@firegearoutdoors.com

Manual changes often occur, ensure to check the Firegear website for any recent updates and warranty information.

FIREGEAR

LIMITED WARRANTY

Firegear Outdoors hereby warrants to the end user that products will be free from material and workmanship defects that prevent safe and correct operation of the product. The warranty commences from date of sale to the end user for the following period:

ALL WARRANTIES WITHIN THIS DOCUMENT ONLY APPLY TO PRODUCTS MANUFACTURED AFTER | 01 / 01 / 2026

BURNER SYSTEMS I BURNERS I COMPONENTS I ACCESSORIES TYPE OF PRODUCT	CONSUMER APPLICATIONS	COMMERCIAL APPLICATIONS
Construction and Manufacturer Defects	Lifetime Warranty	2 Year Warranty
Stainless Steel Burners and Pans	Lifetime Warranty	2 Year Warranty
Pro Series Burners	Lifetime Warranty	2 Year Warranty
Gas Valve, Spark Igniter, and Pilot Assemblies	5 Year Warranty	2 Year Warranty
AWS Electronic Ignition Systems (12 VAC, 24 VAC, 30 VAC)	3 Year Warranty	1 Year Warranty
TPSI Electronic Components	5 Year Warranty	2 Year Warranty
MT Components (Key Valve)	5 Year Warranty	2 Year Warranty
Refractory Gas Log Sets	5 Year Warranty	2 Year Warranty
Skytech Manufactured Optional Controls	2 Year Warranty	1 Year Warranty

OUTDOOR FIREPLACE I KALEA BAY TYPE OF PRODUCT	CONSUMER APPLICATIONS	COMMERCIAL APPLICATIONS
Construction and Manufacturer Defects	Lifetime Warranty	Lifetime Warranty
Stainless Steel Components	Lifetime Warranty	Lifetime Warranty
Gas Valve, pilot Assembly, Power Supply, and Controls	5 Year Warranty	2 Year Warranty
Skytech Manufactured Optional Controls	5 Year Warranty	2 Year Warranty

SANCTUARY SERES - GFRC FIRE FEATURES TYPE OF PRODUCT	CONSUMER APPLICATIONS	COMMERCIAL APPLICATIONS
GFRC Structure * The warranty covers manufacturing defects or structural failure. Small stress cracks and surface crazing are a natural occurrence in GFRC products and are not covered within this warranty. Discoloration over time is a natural process and is not covered by this warranty	* 3 Year Warranty	* 3 Year Warranty
Burner System ** Please refer to your burner system warranty for more information about your warranty.	** Refer to Burner System	** Refer to Burner System

ACCESSORIES TYPE OF PRODUCT	CONSUMER APPLICATIONS	COMMERCIAL APPLICATIONS
Construction and Manufacturer Defects	Lifetime Warranty	Lifetime Warranty
Stainless Steel Components (Lids, Stainless Steel Covers)	Lifetime Warranty	Lifetime Warranty
ESTOP1-0H, Windshields, Hoses & Regulators	1 Year Warranty	1 Year Warranty

For additional details, please refer to the products installation manual

The end-user must provide a bill of sale, canceled check, or payment record to verify the purchase date and to establish the warranty period. This Limited Warranty shall be valid and limited to the original purchaser only.

WARNING: Any modification to the product will void the warranty.

This Limited Warranty shall be limited to the repair and/or replacement of parts that have been proven to be defective under normal use and service. All warranty claims must be made by the Distributor/Dealer account on behalf of the end-user. You may contact Technical Support at 800-966-8126.

Our Technical Service Department must confirm all approved defects. If a defect is confirmed and we approve the claim, we will replace such parts without charge. This warranty gives you specific legal rights, and you may also have other rights, which vary from state to state.

The manufacturer may request defective products returned with an RMA (Return Merchandise Authorization) issued by Firegear Outdoors for specific products, which is considered to be the nature of the defect and or warranty claim. Product to be returned should; be packed so as not to incur damages during transportation. Firegear Outdoors is not responsible for damages on returned items. RMA is valid for thirty (30) days from the date issued. The RMA must be clearly marked on the outside of the package.

Please check with your local building code department or governing agency for proper approvals before purchasing. Firegear Outdoors is not responsible for any violation of local codes.

Travel, diagnostic cost, service labor to repair the defect on warranty parts to and from the factory will be the responsibility of the owner. We will not be responsible for labor charges and/or damage incurred in installation, repair, and replacement. Firegear Outdoors is not responsible for Issues related to gas or electrical installation.

The Limited Warranty is voided if not assembled, installed, and operated as intended. This Limited Warranty does not cover any defects due to accident, abuse, misuse, alteration, misapplication, vandalism, improper installation or improper maintenance or service, removal from the original location, or re-installation into another location, or failure to perform normal and routine maintenance.

Damage due to severe weather conditions such as hail, hurricanes, earthquakes, tornadoes, discoloration due to overheating, exposure to chemicals (including chlorine and salt), either directly or in the atmosphere, or very high humidity, is not covered by this Limited Warranty. Coastal, humid and/or salt environments are subject to manufacturer review. All out-of-box claims must be made within 30 days of purchase and must be made prior to installation. Any product installed damaged will be considered damaged during installation and not covered under warranty.

There are no other express warranties except as set forth herein. For consumer applications, any applicable implied warranties of merchantability and fitness are limited in duration to the period of coverage of this Limited Warranty. Some states do not allow limitation on how long an implied warranty lasts, so this limitation may not apply to you.

For Commercial Applications, the liability of Firegear Outdoors is limited to the express terms of this warranty. We expressly disclaim any and all implied warranties, including any warranties of fitness for a particular purpose or merchantability.

We are not liable for any special, indirect or consequential damages. Our maximum liability is limited to the purchase price of the purchased units. Some states do not allow the exclusion or limitation of incidental or consequential damages, so this limitation or exclusion may not apply to you.

We do not authorize any person or company to assume for it any other obligation or liability in connection with the sale, installation, use, removal, return, or replacement of its equipment, and or such representation are binding.

FIREGEAR
Firegear Outdoors
1600 Riverfork Dr. East
Huntington, IN 46750

www.firegearoutdoors.com

TEMPLATE CUTOUT FOR AWS PLATE

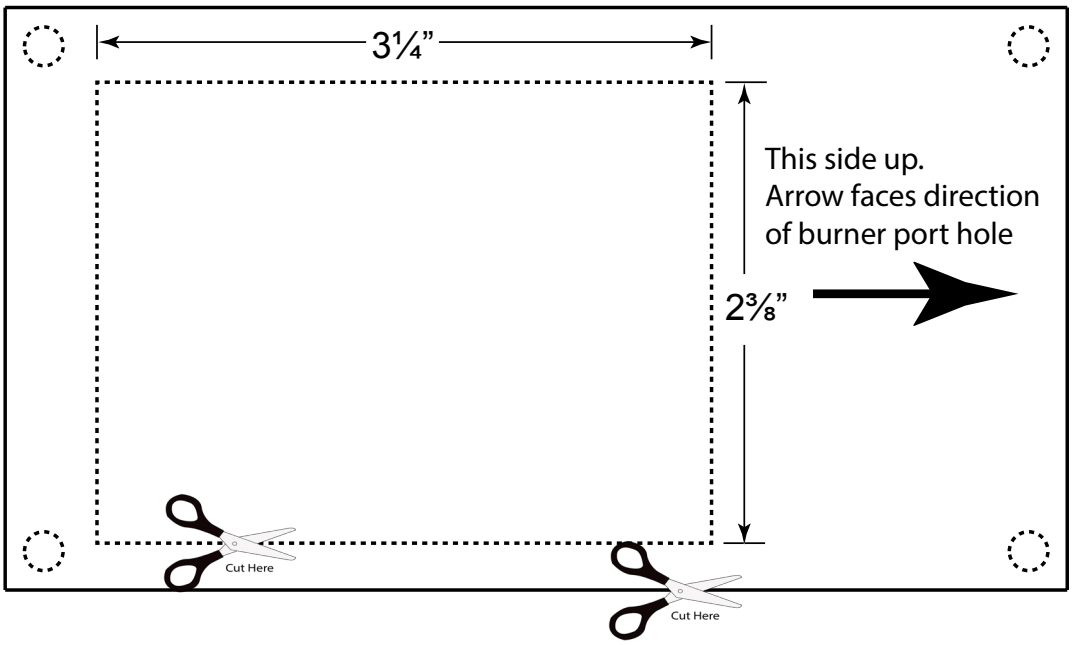

This template **must** be used to cut the correct hole size for pilot assembly. See pages 13 and 14 for reference. Cut the outside black line as shown above and the dotted lines for proper alignment and installation of the pilot.

Having problems getting the fire pit to operate? Don't leave the job site! We want to help! Call 260-355-5577 for Technical Support between the hours of 8:30AM to 4:30PM

BEFORE YOU CALL WE WILL NEED THIS INFORMATION

1. Model Number: _____
2. Serial Number: _____
3. How long is the gas line run? Nat Gas ____ LP Gas ____
4. What size is gas line? _____
5. Inlet Gas Pressure: _____WC
   Manifold Gas Pressure: _____ WC
6. What type of media are you using? _____
7. Review the troubleshooting section in the installation manual.
8. What are the symptoms? Please be prepared to explain.
9. Be prepared to send photos to us when on the phone.
10. Found missing or damaged parts? Let us know ASAP or send photos.