FIREGEAR® by earthcore®

DO NOT DISCARD. THIS MANUAL HAS IMPORTANT OPERATING AND MAINTENANCE INSTRUCTIONS. LEAVE WITH THE HOMEOWNER.

MODEL:

SERIAL #:

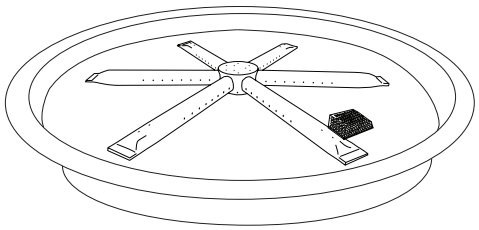

PFS® C US #20-025

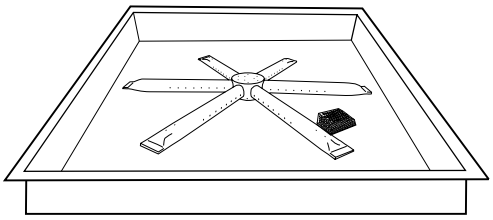

MODELS

Natural Gas Models	Description	Propane Gas Models
FPB-19RBS16TPSI-N	19” Rd Drop-In Pan with 16” Stainless Spur Burner	FPB-19RBS16TPSI-P
FPB-25RBS22TPSI-N	25” Rd Drop-In Pan with 22” Stainless Spur Burner	FPB-25RBS22TPSI-P
FPB-29RBS22TPSI-N	29” Rd Drop-In Pan with 22” Stainless Spur Burner	FPB-29RBS22TPSI-P
FPB-33RBS31TPSI-N	33” Rd Drop-In Pan with 31” Stainless Spur Burner	FPB-33RBS31TPSI-P
FPB-20SBS16TPSI-N	20” Sq Drop-In Pan with 16” Stainless Spur Burner	FPB-20SBS16TPSI-P
FPB-26SBS22TPSI-N	26” Sq Drop-In Pan with 22” Stainless Spur Burner	FPB-26SBS22TPSI-P
FPB-32SBS31TPSI-N	32” Sq Drop-In Pan with 31” Stainless Spur Burner	FPB-32SBS31TPSI-P

Outdoor Thermocouple Piloted Safety Ignition (TPSI) Fire Pits

Installation and Operating Instructions

IF YOU CANNOT READ OR UNDERSTAND THESE INSTALLATION INSTRUCTIONS DO NOT ATTEMPT TO INSTALL OR OPERATE THIS APPLIANCE

INSTALLATION PRECAUTION:

This system requires a minimum 18 square inches (per side) of cross ventilation. Failure to provide proper ventilation will void the warranty.

Warning: For Outdoor Use Only

NATIONAL FIREPLACE INSTITUTE NFI CERTIFIED www.nficertified.org

We recommend that our gas hearth products be installed and serviced by professionals who are certified in the U.S. by the National Fireplace Institute® (NFI) as NFI Gas Specialists.

DANGER

CARBON MONOXIDE HAZARD

This appliance can produce carbon monoxide which has no odor.

Using it in an enclosed area can kill you.

Never use this appliance in an enclosed space such as a camper, tent, car or home.

DANGER

FIRE OR EXPLOSION HAZARD

If you smell gas:

1. Shut off gas to the appliance
2. Extinguish any open flame.
3. If odor continues, leave the area immediately.
4. After leaving the area, call your gas supplier or fire department.

WARNING

Do not leave unattended during use.
Do not use for cooking.
Follow all gas leak procedures in this manual prior to operation.

WARNING

Do not store or use gasoline or other flammable vapors and liquids in the vicinity of this or other appliance.

An LP cylinder not connected for use shall not be stored in the vicinity of this or any other appliance.

WARNING

Improper installation, adjustment, alteration, service or maintenance can cause injury or property damage, personal injury of loss of life
Read the owner's information manual provided with this appliance.
Installation and service must be performed by a qualified installer, service agency, or the gas supplier.

WARNING

If the information in this manual is not followed exactly, a fire or explosion may result causing property damage, personal injury, or **loss of life**.

FOR YOUR SAFETY

Do not store or use gasoline or other flammable vapors and liquids in the vicinity of this or other appliances.

Fuels used in gas fired appliances, and the products of combustion such as fuels, contain chemicals known to cause cancer, birth defects and/or other reproductive harm.
This warning is issued pursuant to the California Health & Safety Code Sec. 25249.1

CALIFORNIA PROPOSITION 65

⚠ WARNING

This product is designed to operate with one of the following fuel sources: Liquid Propane or Natural Gas. The fuel used to operate this product, and the products of combustion of such fuel, can expose you to chemicals including Benzene which is known to the State of California to cause cancer, birth defects and other reproductive harm and Carbon Monoxide which is known to the State of California to cause birth defects or other reproductive harm.
(For more information go to: www.p65Warnings.ca.gov.)

TABLE OF CONTENTS

Specifications	4
Gas Pipe Sizing Chart	5
Preparation for Non-Combustible Structure	6
Hard Piping to Fire pit	6
Cross Ventilation Requirements	6
High Elevation	6
Installation into an Approved Enclosure	7
Removing Parts from Carton	8
Typical Installation Drawings	8-9
Installing Orifice and Gas Valve Control Panel	8
Control Panel, Pilot Assembly & Media Installation	9
Operation	11
Lighting Instructions	11
Replacement Parts	12
Replacement Parts List	13
Maintenance/ Trouble Shooting	14
Optional Accessories	15

All media (i.e. lava rock, lava stones, lava boulders and fire glass) has the potential of thermal spalling. This is a process that may occur when media is wet and moisture gets trapped inside of the material due to rapid temperature differences. When this happens the media has the potential to crack or “pop” outside the fireplace.

WE HIGHLY RECOMMEND COVERING ALL FIRE FEATURES WHEN NOT IN USE

The use of a cover can lessen the impact of thermal spalling; however, heavy rains, high humidity and the presence of moisture may still cause the media to pop.

ALWAYS USE CAUTION WHEN USING THE FIRE FEATURE

Extra caution should be taken when lighting a fireplace when heavy rains, high humidity and moisture are present. Light the fireplace; leave the area allowing any moisture in the media to dissipate. We strongly recommend that during this drying out time that you monitor the fire feature from a distance. This drying out period should be no less than 30 minutes. Continue monitoring the flame from distance to ensure that all popping has ceased before fully enjoying the fire.

TPSI SPECIFICATIONS

Model: Natural Gas (NG)	**Model:** Propane Gas (LP)	A Pan Depth	B Min/Max Install Opening	C Inside Pan	D Ground Level	E Side Wall	F Combustible Ceiling	G Combustible Floor
FPB-19RBS16TPSI-N	FPB-19RBS16TPSI-P	2 ¾"	19 ¼" - 20"	19"	8"	36"	96"	18"
FPB-25RBS22TPSI-N	FPB-25RBS22TPSI-P	2 ¾"	25 ¼"- 26"	25"	8"	36"	120"	18"
FPB-29RBS22TPSI-N	FPB-29RBS22TPSI-P	2 ¾"	30 ¼"- 31"	29"	8"	36"	120"	18"
FPB-33RBS31TPSI-N	FPB-33RBS31TPSI-P	2 ¾"	34 ¼ - 35"	33"	8"	36"	120"	18"
FPB-20SBS16TPSI-N	FPB-20SBS16TPSI-P	2 ¾"	20 ¼"- 21"	20"	8"	36"	96"	18"
FPB-26SBS22TPSI-N	FPB-26SBS22TPSI-P	2 ¾"	26 ¼"- 27"	26"	8"	36"	120"	18"
FPB-32SBS31TPSI-N	FPB-32SBS31TPSI-P	2 ¾"	32 ¼"- 33"	32"	8"	36"	120"	18"

Table 1 Fire pit dimensions.

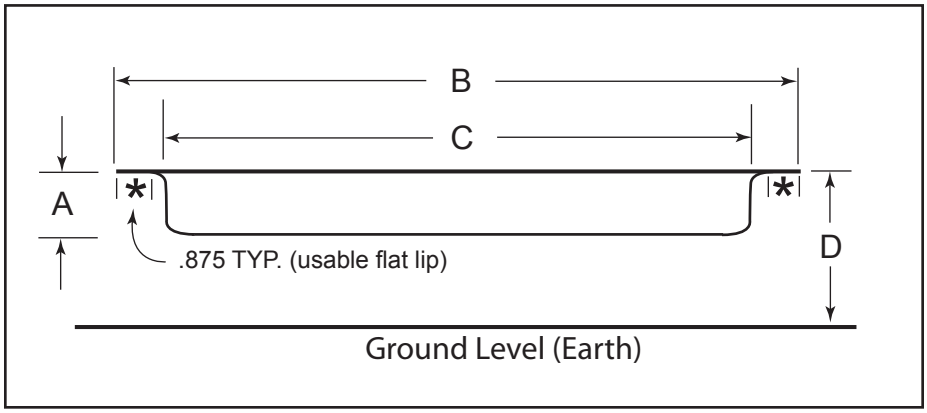

Fig 1. Fire pit dimensions; refer to Table 1. (Dimensions applicable to round or square pans)

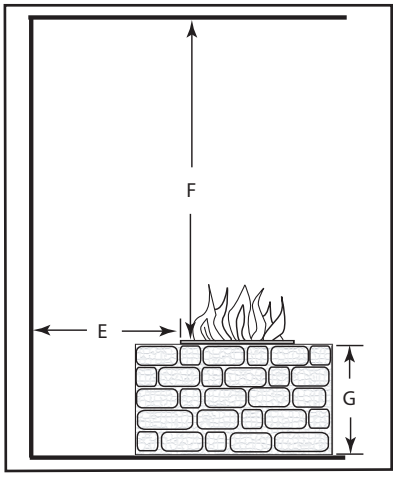

Fig 2. Clearance to Combustibles (Not to be used in an enclosed space)

Model: Natural Gas	***NG Orifice***	***Model: Propane (LP)***	***LP Orifice***	***Propane (LP) Btu's***
FPB-19RBS16TPSI-N	OAS-NG29	FPB-19RBS16TPSI-P	OAS-LP41	75,000 (21.98kW)
FPB-25RBS22TPSI-N	OAS-NG16	FPB-25RBS22TPSI-P	OAS-LP31	125,000 (36.63kW)
FPB-29RBS22TPSI-N	OAS-NG16	FPB-29RBS22TPSI-P	OAS-LP31	125,000 (36.63kW)
FPB-33RBS31TPSI-N	OAS-NG11	FPB-33RBS31TPSI-P	OAS-LP29	150,000 (43.96kW)
FPB-20SBS16TPSI-N	OAS-NG29	FPB-20SBS16TPSI-P	OAS-LP41	75,000 (21.98kW)
FPB-26SBS22TPSI-N	OAS-NG16	FPB-26SBS22TPSI-P	OAS-LP31	125,000 (36.63kW)
FPB-32SBS31TPSI-N	OAS-NG11	FPB-32SBS31TPSI-P	OAS-LP29	150,000 (43.96kW)

Table 2 Btu Specifications. See LP conversions in accessory page.

Disclaimer: Btu listings are based on 7.0"WC for Natural Gas and 11.0"WC for Liquid Propane (LP) to the gas valve. Flex line size and proper gas pipe sizing will also affect Btu's. As a result your Btu's may vary slightly from Table 2 specifications.

Pressure	**NG**	**LP**
Min. Inlet	3.5"WC (0.87kPa)	10.5" WC (2.61kPa)
Max. Inlet	10.5" WC (2.61kPa)	13.0" WC (3.23kPa)
Normal Inlet	7.0" WC (1.74kPa)	11.0" WC (2.73kPa)

Table 3 Gas Pressure

GAS PIPE SIZING CHART

NATURAL GAS : PIPE SIZING CHART

Length of Pipe in Feet	1/2"	3/4"	1"	1 - 1/4"	1 - 1/2"	2"	2 - 2 1/2"	3"	4"
10	108	230	387	793	1237	2259	3640	6434	-
20	75	160	280	569	877	1610	2613	5236	9521
30	61	129	224	471	719	1335	2165	4107	7859
40	52	110	196	401	635	1143	1867	3258	6795
50	46	98	177	364	560	1041	1680	2936	6142
60	42	89	159	336	513	957	1559	2684	5647
70	38	82	149	317	476	896	1447	2492	5250
80	36	76	140	239	443	840	1353	2315	4900
90	33	71	133	275	420	793	1288	2203	4667
100	32	68	126	266	411	775	1246	2128	4518
125	28	60	117	243	369	700	1143	1904	4065
150	25	54	105	215	327	625	1008	1689	3645
175	23	50	93	196	303	583	993	1554	3370
200	22	47	84	182	280	541	877	1437	3160
300	17	37	70	145	224	439	686	1139	2539

- Natural Gas (NG) flow is given in thousands of BTU/hr. = 1 cubic foot of NG gas - 1000 BTU
- Nominal pressure at the burner for Natural Gas is 3.5" of water column. (Typical machine supply 5"-7")
- Pipe length must include additional length for all fittings. Add approximately 5 feet of pipe per fitting.
- Natural Gas Example: A machine with a burner that requires 440,000 BTU would need a 1 -1/4" pipe for a 20" long run.

LIQUID PROPANE : PIPE SIZING CHART

Length of Pipe in Feet	1/2"	3/4"	1"	1 - 1/4"	1 - 1/2"	2"	2 - 2 1/2"	3"	4"
10	275	567	1071	2205	3307	6221	10140	17990	35710
20	189	393	732	1496	2299	4331	7046	12510	25520
30	152	315	590	1212	1858	3465	5695	10110	20620
40	129	267	504	1039	1559	2992	4778	8481	17300
50	114	237	448	913	1417	2646	4343	7708	15730
60	103	217	409	834	1275	2394	3908	6936	14150
70	89	185	346	724	1086	2047	3329	5908	12050
80	78	162	307	630	976	1811	2991	5309	10830
90	69	146	275	567	866	1606	2654	4711	9613
100	63	132	252	511	787	1496	2412	4281	8736
125	54	112	209	439	665	1282	2083	3618	7382
150	48	100	185	390	590	1138	1808	3210	6549
175	43	90	168	353	534	1030	1637	2905	5927
200	40	83	155	325	491	947	1505	2671	5450
300	37	77	144	303	458	887	1404	2492	5084

- Liquid Propane (LP) Gas flow is given in thousands of BTU/hr. = 1 cubic foot of LP gas - 2500 BTU.
- This chart refers to low pressure LP, after regulation, Standard nominal pressure at the burner for Liquid Propane Gas is 11" of water column.
- Pipe length must include additional length for all fittings. Add approximately 5 feet of pipe per fitting.
- LP Example: A machine with a burner that requires 440,000 BTU would need a 1" pipe for a 20' long run.

NOTE: The sizing charts above list the specific pipe sizes required for the amount of BTU's for a new gas line installations. If you are using an existing gas line you must take into consideration the existing gas line capacities to ensure you will have proper pressure. This chart is for reference only, we recommend you consult with a Licensed Plumber/Gas Fitter or NFPA54 (National Fuel Gas Code - current edition) for more details.

Table 4 Gas Pipe Sizing Chart

WARNING: Proper clearances from combustible materials must be maintained from all sides, top and bottom of this appliance. Use the specifications listed on page 4 for proper clearance to combustibles.

PREPARING A NON-COMBUSTIBLE STRUCTURE

ALL PANS OR FLAT DISC'S MUST BE REMOVABLE FOR SERVICE Pans or disc's CAN NOT be installed in a manner to prevent them from being removed for service.

Top coping material or top cap of fire pit MUST NOT overlap onto the pan or disc surface without easily being removed. Pan lip or disc edge must be unobstructed so it can be lifted out of the fire pit for servicing. We highly recommend the use of a flex frame kit all installations.

These fire pits can be installed on a flat, stable surface, away from any combustible materials. Install fire pit on any level, outdoor non-combustible, flat stable surface or a combustible floor according to the clearances specified in this manual. **NOTE**: Do not place fire pit directly on grass, dirt, or rocks as this may prevent proper ventilation (Fig. 3). **Ensure proper water drainage is also incorporated into the fire pit enclosure.**

HARD PIPING TO FIRE PIT WITHOUT GAS PROXIMITY

NOTE: Refer to the NFPA54 (National Fuel Gas Code) for proper pipe sizing. See gas line sizing chart on page 6 as a reference.

1. Turn **OFF** gas supply system. **NOTE**: All gas connections (except for brass to brass) require the following. Clean pipe threads using either a wire brush or steel wool. Apply pipe sealant to the fittings before making any connection.
2. **BE CAREFUL!** Ensure all gas connections are snug, but do not over tighten!
3. Consult a plumber for proper installation to ensure you are providing adequate gas supply for your application.
4. The primary gas shut-off (not supplied) will require a ½" male flared fitting to enable connection of the stainless steel flex gas line supplied with the fire pit.
5. Do not place an LP tank inside any fire pit enclosure. Locate all propane (LP) tanks outside the enclosure.
6. To prevent performance problems in Propane (LP) fire pits, do not use a Propane tank less than 100lbs. capacity.

IMPORTANT
Installation of Natural or LP gas should be done by a qualified installer, service agency or gas supplier.
The appliance and its manual shutoff valve must be disconnected from the gas supply piping system during any pressure testing of the system at test pressure testing of the system at test pressures in excess of ½" psig (3.5kPa).
This appliance must be isolated from the gas supply piping system by closing its manual shutoff valve during any pressure testing of the gas supply piping system at test pressures equal to or less than ½" psig (3.5kPa)

HIGH ELEVATION INSTALLATION

This appliance is listed for elevations from 0- 4500 feet in Canada and the U.S. If elevation exceeds 4500 feet it may be necessary to decrease the input rating by changing the existing burner orifice to a smaller size. Input should be reduced 4% for each 1000 feet beyond the 4500 feet above sea level. Check with your local gas utility for assistance in determining the proper orifice in your location. In some cases the heating value may already be reduced and downsizing the orifice may not be necessary. Refer to NFPA54 Table E.1.1(d) for high altitude orifice sizing.

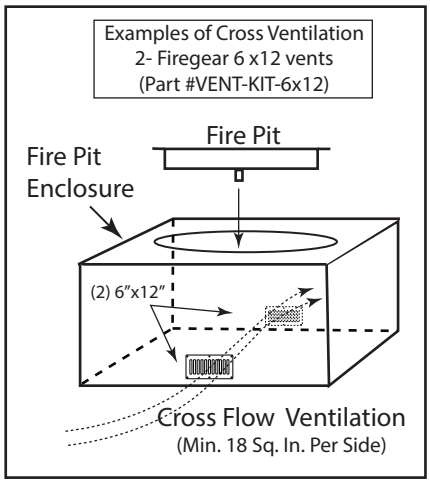

Fig 3. Cross Ventilation Example

INSTALLATION OF FIRE PIT INTO AN APPROVED ENCLOSURE

REQUIREMENTS

1. Only non-combustible materials should come in direct contact with any part of the fire pit. If the area underneath should is a flat level combustible surface according to the clearances specified in this manual on page 4.
2. Refer to the NFPA54 (National Fuel Gas Code) for proper pipe sizing. See Table 4 on page 5.
3. Determine the size of the round or square fire pit you are preparing to install (Refer to page 4).
4. You must provide a round or square cut-out opening to place the fire pit into the non-combustible enclosure. Do not exceed the maximum opening from Table 1, dimension B.
5. Follow the local code requirements for the gas type being used. This fire pit should be installed in accordance with local codes and ordinances or in the absence of local codes, with the latest National Fuel Gas Code, ANSI Z223.1 NFPA54 or CSA B149.1, Natural and Propane Installation Code in Canada.
6. Fire pits create high temperatures, it is very important to have any combustibles at a safe distance.
7. ***CAUTION:*** **A minimum of 18 square inches of cross ventilation (per side) is required to keep the inside of the enclosure dry. We recommend installation of a VENT-KIT-6x12SS. See accessory page 14.**
8. These products are designed for **outdoor use only**. Not approved for any indoor use.
9. This fire pit is designed to have lava rock completely covering the spur burner, so that the burner is not visible. Do not cover more than 1" above the top of the covered burner. When purchasing Lava Rock us minimum of 1 to 2-inch diameter as a base to fill the burner pan. **DO NOT COVER THE IGNITION HOOD WITH ANY ROCK OR MEDIA.**
10. Gas lines and fittings must be installed in to the non-combustible structure. All gas connections must be leak tested before installation of the fire pit. Soapy water leak detection is required before regular use of the fire pit.
11. Do not use material that will absorb moisture over time and will not release this moisture quickly. Moisture can boil in this material and can rapidly break apart and cause damage or personal injury.
12. Never leave any other combustible material on top of the fire pit. This could cause unsafe operation of this system and damage to the component that will not be covered under our warranty.
13. **Ensure proper water drainage is also incorporated into the fire pit enclosure.**

NOTICE

Firegear Outdoor fire pits are constructed and tested to follow the rigid ANSI standards for gas appliances and manufactured safely providing dependable and certified products. If these fire pits are not installed according to the installation manual (i.e. not providing ventilation, not providing proper drainage, installing fire pits below grade or modifying the existing products from a normal installation). Firegear cannot be responsible if the product does not operate as designed.

Modifying the fire pit directly out of the carton will void the warranty and nullify any listing it was certified for. Before you consider creating your own custom design with a certified product ensure you contact Firegear to consult the installation before proceeding. If you move forward and modify a product without consulting, Firegear cannot be responsible if the product does not operate as designed.

REMOVING PARTS FROM CARTON

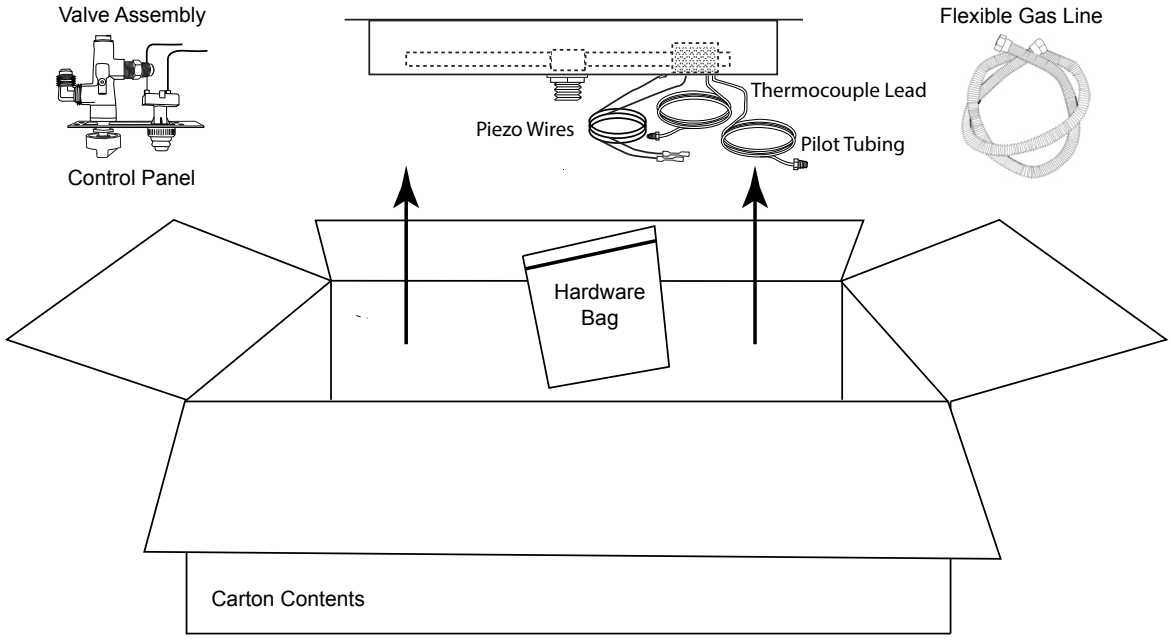

Fig. 4 Removing contents from carton.

This fire pit is comes partially assembled from the factory. The pilot tubing and thermocouple leads are 48" in total length, therefore, when mounting the Gas Valve/Piezo mounting plate, ensure the mounting plate is close enough to make all connections.

Open carton and remove contents. Inspect for any damage or missing parts.

The hardware bag include mounting plate screws, orifice, Piezo wires and flex connector to complete the installation.

Carefully install the fire pit into the prepared enclosure, connect the gas line and wire according to the figure drawings in this manual.

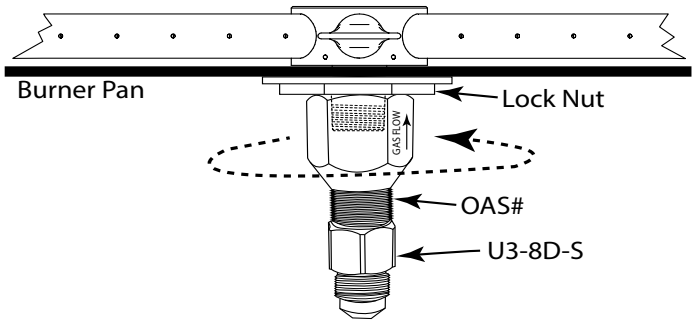

Fig. 5 Installing OAS assembly to spur burner.

INSTALLING BURNER ORIFICE (OAS)

Before the fire pit is installed:

Locate the burner nipple underneath the burner pan. Ensure the nipple on the spur burner has gas rated Teflon tape wrapped around the threads (See Fig. 5)

.

Install the OAS (orifice air shutter) to the nipple of the burning spur in a clock wise manner. Secure into position.

CONTROL PANEL MOUNTING PLATE

The control panel can use the template on the back of this manual for mounting or you can purchase an optional PAVER-CP-TPSI control plate to mount the control panel. Once you have determined the location of mounting plate install the gas connections and Piezo wires as shown in Fig. 6 and secure all connections.

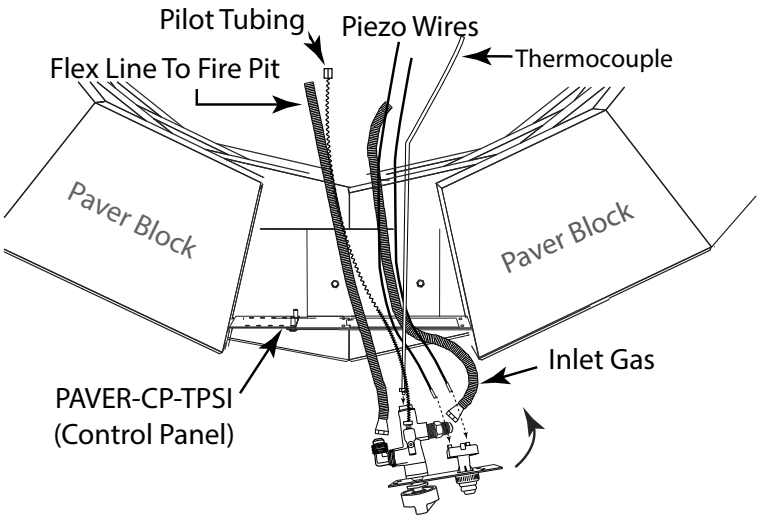

Fig. 6 Installing control panel into PAVER-CP-TPSI mounting plate.

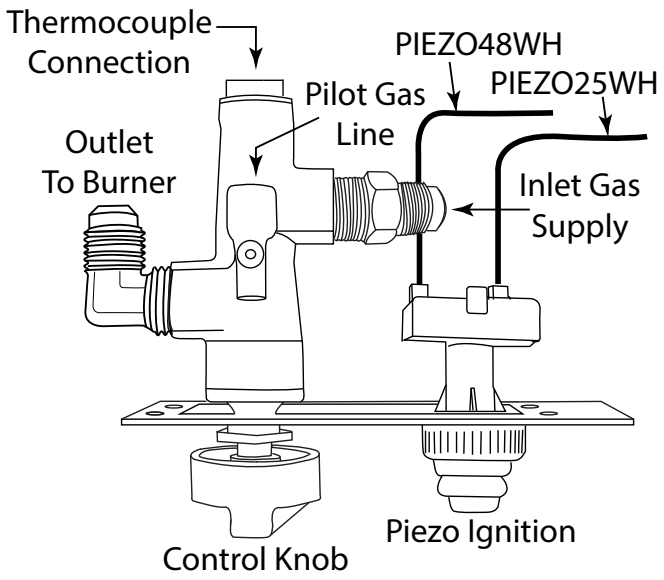

Fig. 7 TPSI control panel mounting plate.

Remove red button cap and install battery into Piezo ignitor module.

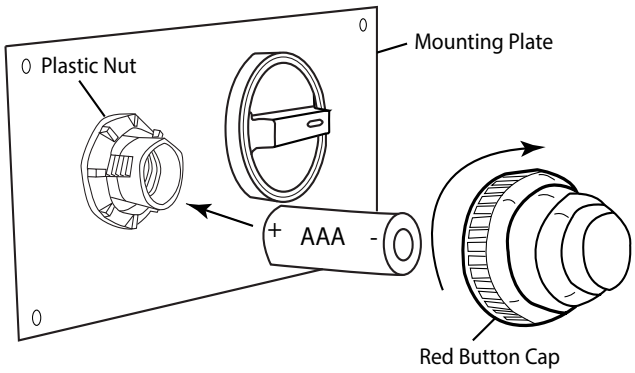

Fig. 8 Installing battery into Piezo.

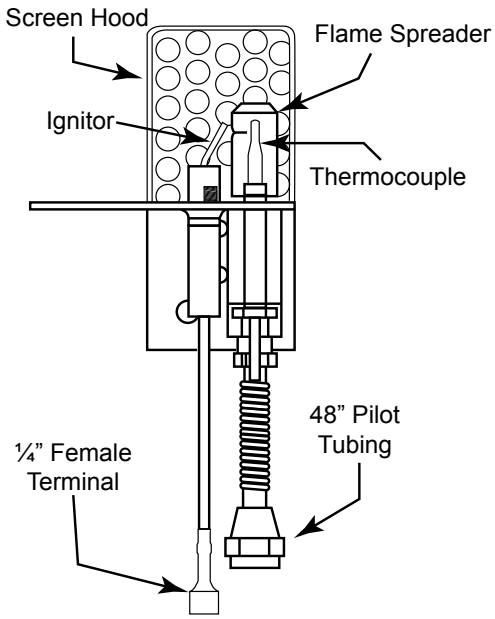

Fig. 9 Show TPSI pilot assembly identification.

PILOT ASSEMBLY

It is important to understand that this is a "standing pilot" system. When placing media around the pilot area ensure the top of the screen hood/cover is open to exhaust the gasses and enable the pilot to operate properly. See Fig. 9.

INSTALLATION OF LAVA ROCK/MEDIA INTO FIRE PIT

Install lava rock/media into the burner pan. Ensure the lava rock is a 1 to 2-inch diameter for proper operation. **Note:** Do not pour Lava Rock directly from bag. It should be placed naturally and NOT packed in tight. Loose fitting is important to ensure robust flames. Be sure rocks are free of any excessive dust. This prevents the burner pan weep holes from being plugged and holding water.
IMPORTANT: **Do not place media directly on top or under the screen cover.** The screen must be free of any debris to ensure proper lighting of burner and good flame sense (See Fig. 10).

Cover the burner completely with media but do not make the depth greater than 1-inch overtop of the burner port-holes.

Do NOT cover the top of the screen hood with any rock or glass. It must be free an any debris to operate properly.

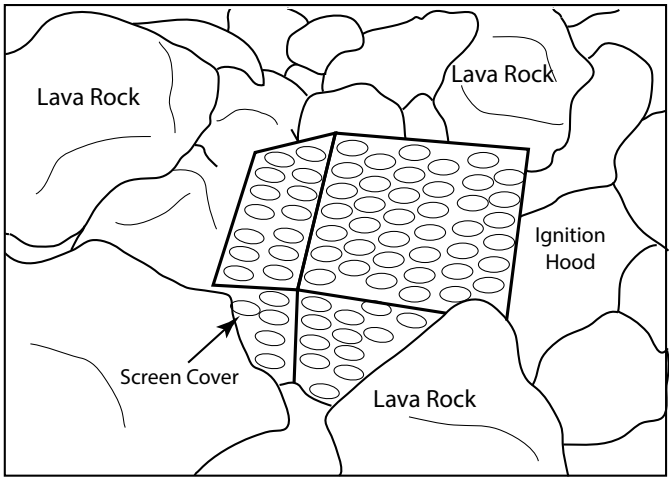

Fig. 10 Keep screen cover exposed

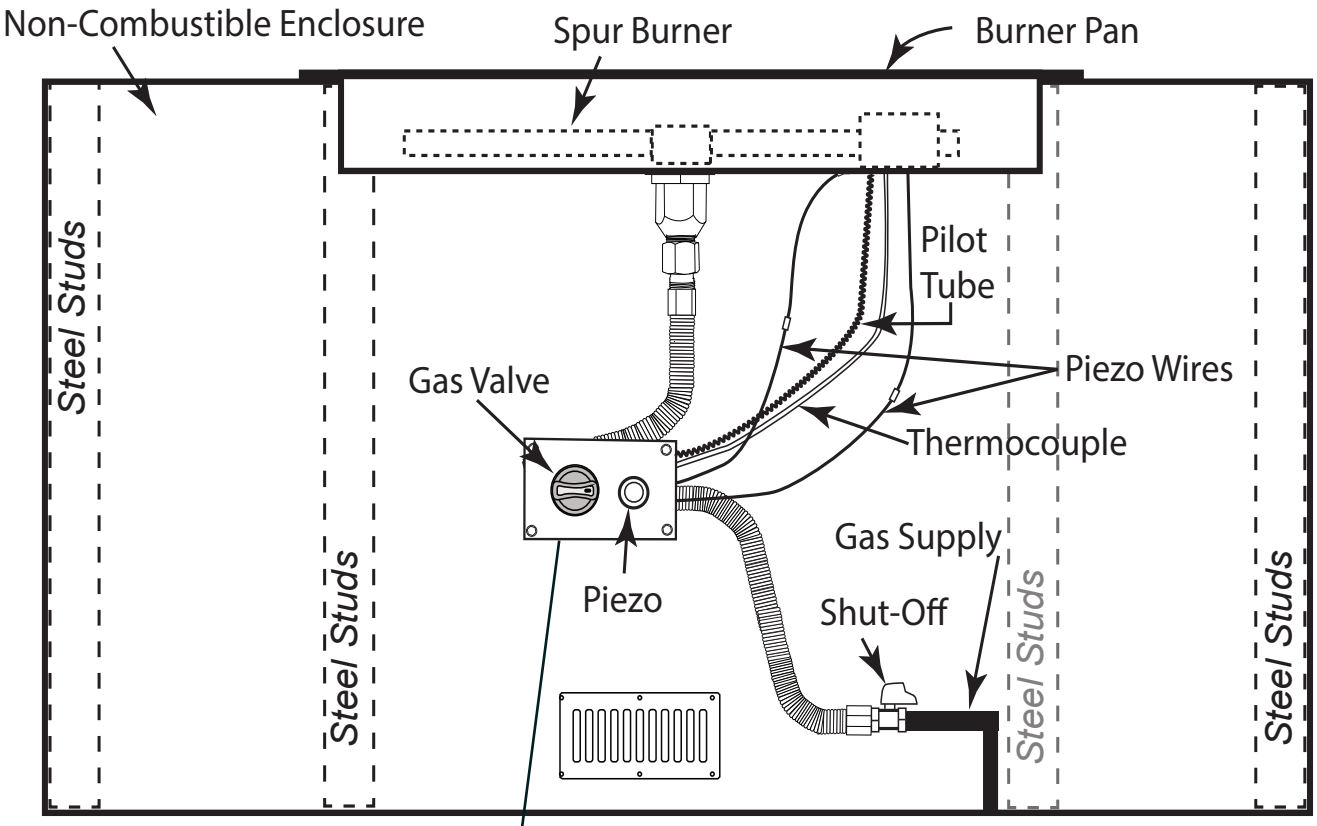

Gas valve and flexible gas lines are supplied; E-Stop shut-off is not supplied, but available in accessories page. Flex lines with flared fittings do not require Teflon tape or pipe compound. Ensure not to "kink" the flex lines to allow better gas flow of gas. The illustration above is only a guide for the gas connection. Local codes may require different methods to connect the gas supply. **Note: See optional mounting method of TPSI face plate on back of this manual.**

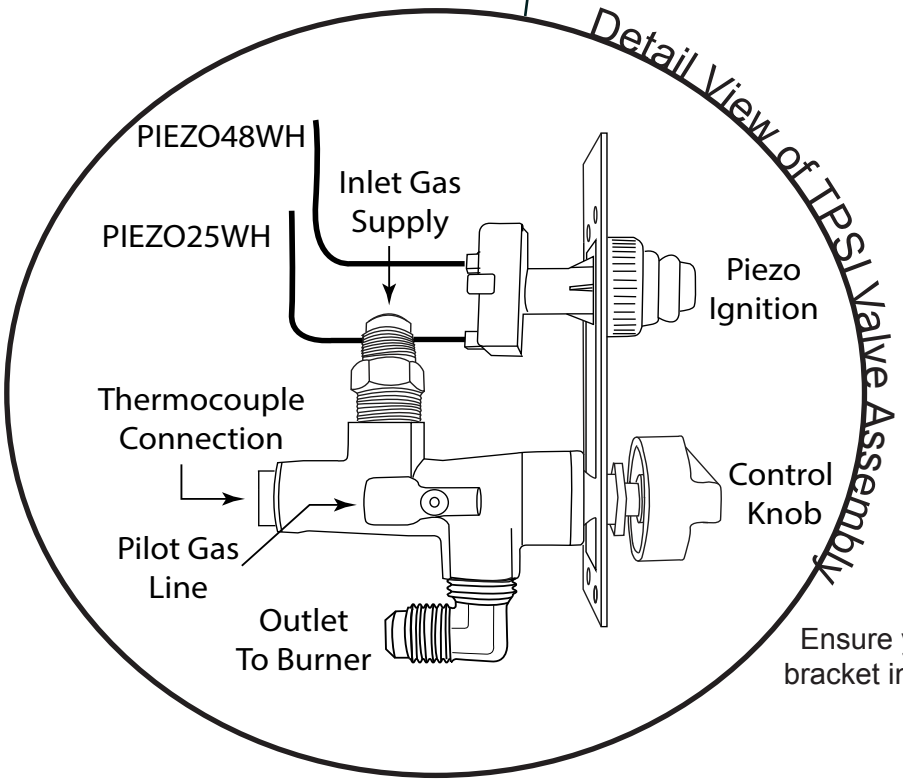

Ensure you determine how to mount valve bracket into place before completing fire pit.

Fig. 11 Typical installation.

OPERATION

CAUTION: Children and adults should be alerted to the hazards on high surface temperatures and should stay away to avoid burns or clothing ignition. Young children should be carefully supervised when they are in the area of the appliance.

WARNING: Do not use this appliance if any part has been under water. Immediately call a qualified service technician to inspect the appliance and to replace any part of control system and any gas control, which has been under water.

SAFETY WARNINGS

1. Never leave the fire pit unattended during operation.
2. Clothing or other flammable materials should not be placed on or near the appliance.
3. Any guard or other protective device removed for servicing the appliance must be replaced prior to operating the appliance.
4. Installation and repair should be done by a qualified service person. The appliance should be inspected before use and at least annually by a qualified service person. More frequent cleaning may be required as necessary. It is imperative the control compartment, burners and circulating air passageways of the appliance be kept clean.
5. Inspect the fuel supply connection before each use of the appliance.
6. Temporary storage of this appliance indoors is permissible only if it has been disconnected from its fuel supply (Natural or L.P. gas line).

WARNING

1. This appliance is hot when operated and can cause sever burns if contacted.
2. Do not burn any solid fuels in this appliance.

READ ALL LIGHTING INSTRUCTIONS BEFORE ATTEMPTING TO LIGHT FIRE PIT

CAUTION: **ENSURE YOU HAVE LEAK TESTED THE FIRE PIT BEFORE OPERATING.**

WARNING: Do not stand over fire pit during ignition or operation due to high surface temperatures.

LIGHTING INSTRUCTIONS

TURNING ON FIRE PIT

1. Depress and hold the red Piezo button and ensure sparking is occurring inside the pilot hood. An audible sparking sound can be heard.
2. While holding the Piezo button, slightly depress the control knob inward and rotate counter clockwise to the PILOT position. Depress and hold control knob inward for at least 30 to 60 seconds; to light the PILOT.
3. Once the pilot lights, release the Piezo button and turn control knob counter clockwise to the ON position. If pilot does not stay lit, release the control knob, turn the control knob clockwise to turn OFF and wait 5 minutes before trying again. Turn gas supply OFF to check ignitor spacing and Piezo battery if no sparking occurs.
4. Repeat steps 1-4 to try again.

TURNING OFF FIRE PIT

1. Slightly depress the control knob inward and rotate the knob clock wise to OFF position. Fire pit will turn OFF.
2. After cooling off install cover (if applicable).

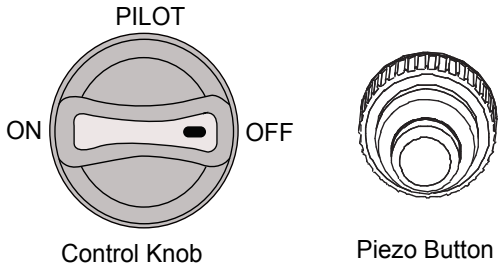

Fig. 12 Control panel with gas valve knob and Piezo.

FPB ROUND AND SQUARE TPSI REPLACEMENT PARTS

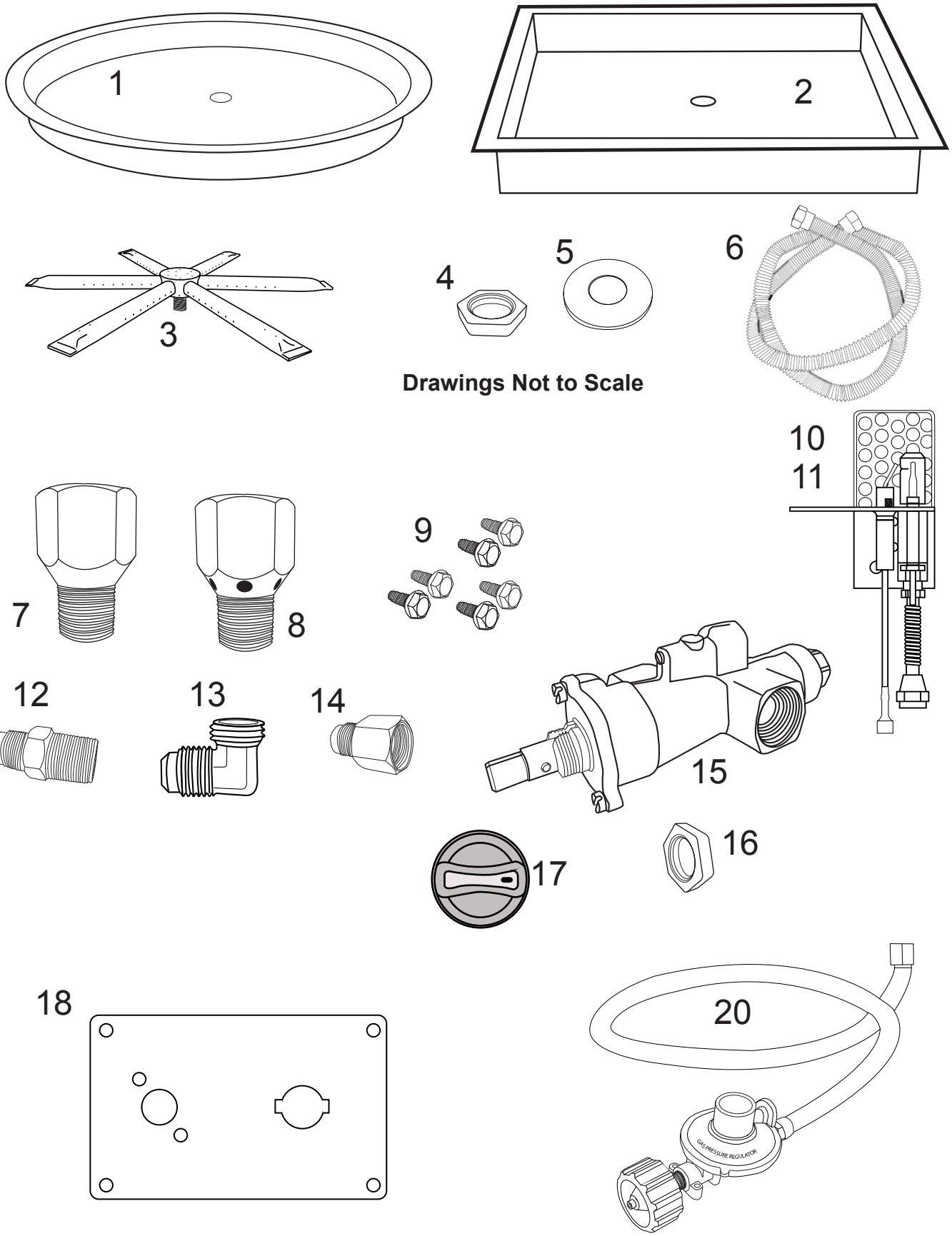

FPB ROUND AND SQUARE TPSI REPLACEMENT PARTS

Item	Description	Qty.	Part Number
1	19-inch Round Stainless Pan	1	PAN-SS19R
1	25-inch Round Stainless Pan	1	PAN-SS25R
1	29-inch Round Stainless Pan	1	PAN-GV29RP2
1	33-inch Round Stainless Pan	1	PAN-GV33RP2
2	20-inch Square Stainless Pan	1	PAN-SS20S
2	26-inch Square Stainless Pan	1	PAN-SS26S
2	32-inch Square Stainless Pan	1	PAN-SS32S
3	16-inch Spur (used on 19” round pans and 20” square pans)	1	B-SPUR16
3	22-inch Spur (used on 25”, 29”, 33” round pans and 26” square pans)	1	B-SPUR22
3	31-inch Spur (used on 33” round and 32” square pans)	1	B-SPUR31
4	1/2” NPS Brass Nut	1	105-8
5	7/8” Flat Washer/Spacer	1	ST3-113-1026
6	Tranquiline 1/2” Flex Gas Line (46-inch Length)	1	T-200-9898-46
7	Air Shutter Orifice NG (Used on Natural Gas Models)	1	See Table 2, Page 4 for specific orifice #
8	Air Shutter Orifice LP (Used on Propane Models)	1	See Table 2, Page 4 for specific orifice #
9	Stainless Steel Thread Cutting Screws #10-24x ½”	8	ST3-113-1028
10	Complete Natural Gas Pilot Assembly with 48” leads	1	PSE-NA495
11	Complete Propane Gas Pilot Assembly with 48” leads	1	PES-LP495
12	½” OD Flare to ½” MIP Fitting	1	U1-8D-S
13	½” Flare to ½” MIP 90° elbow	1	49-88
14	½” NPT Female to ½” Male Flare Fitting	1	U3-8D-S
15	Copreci High Capacity Gas Valve	1	68001599
16	Lock Nut, M15 x 1 for TPSI Gas Valve	1	08032504
17	Gas Valve Control Knob for TPSI Valve	1	CN-ALHC
18	TPSI Face Plate	1	78188
19	¼” Flare x ¼” Flare Fine Thread Brass Union (adapter for pilot tube) Not shown	1	FTG79-3
20	* LP Regulator with 32” Hose	1	FG-32LPHRK
21	#10-24 Stainless Nut (not shown)	4	ST3-113-1020
22	#10 Stainless Flat Washer (not shown)	4	WASHER10SS
23	#10-24 x 1.25” Stainless Steel Phillips Screw (not shown)	4	SCREW1024PANSS
24	Copreci Valve Knob Label Sticker (not shown)	1	VALVEKNOBLABEL
25	48” long ¼” OD Corrugated Pilot Tube (not shown)	1	90-9898-48
26	Manual Spark Ignitor Module (not shown)	1	3042-RB
27	23" Piezo Extension wire - See page 16 (not shown)	1	PIEZO23WH
28	48" Piezo Extension wire - See page 16 (not shown)	1	PIEZO48WH
29	Ground tab for Piezo ignition (not shown)	1	GROUNDTAB
30	5½” x 3” TPSI cover plate (not shown)	1	PLATE-AWS
31	Cable and lanyard assembly with Rating Label (not shown)	1	CABLE-LABELPLATE

FIRE PIT MAINTENANCE

1. The fire pit should be inspected and cleaned before initial use at least annually by a qualified field service person.
2. Any component that is found faulty must be replaced with an approved component.
3. Any tampering or modifying with the fire pit is dangerous and voids all warranties.
4. During winter months in cold climates and various seasons operation the fire pit may be affected by weather conditions. It is recommended to use a cover/lid overtop of your fire pit to protect it from humid/rainy weather conditions when not in use. Heavy rains/downpours could affect the fire pit operation if not covered; if this occurs ensure you allow the fire pit time to dry out before attempting to operate. **NOTE**: If a combustible type cover is used over the fire pit when not in use be sure to remove it before operation to prevent a severe safety hazard.
5. Carbon (soot) may build up on the surface of logs (if installed) during heavy use. Sooting may also occur periodically on the screen of the ignitor hood. To clean, brush off with a dry bristle brush or cloth. Keep soot away from clothing or furniture.
6. Over time stainless steel parts can discolor when heated, usually a golden or brown hue. This discoloration is normal and does not affect the performance of the appliance.

TROUBLE SHOOTING

Symptom	Remedy
Fire pit won't light	1. Bleed gas line. 2. Ensure all gas supply lines are turned ON. 3. Ensure there is not too much media overtop of burner; it can inhibit gas from flowing.
Low Flame	1. Ensure the base media is at least 1-inch in diameter and top media is no more than 1-inch over top of burner. 2. Ensure all shut-off valves and valve is fully open. 3. Check for spider webs inside burner orifice.
Water in my fire pit	1. Excess dust/sand material from media may be blocking the weep holes to relieve water. 2. Remove all media and unplug weep holes. Clean or install new media free of dust and dirt. 3. Ensure fire pit enclosure has proper drainage for water and proper ventilation to dry out. 4. Recommend to purchase a cover/lid to keep excessive water out of the fire pit.
Whistling Noises	1. Check media to ensure it is not too tightly packed around the burner tube. 2. Ensure a non-whistling flex connector is being used.
Fire Pit Shuts Off After A Short Period of Operation	1. Windy days can potentially blow pilot flame out. Gusts of 25-30mph or higher can cause pilot intermittent outage. 2. Too much media around the pilot can cause thermocouple to overheat. 3. Operating the fire pit after heavy rains can potentially cause pilot outage. Let the fire pit completely dry before using.

OPTIONAL ACCESSORIES

The following accessories are available from your local Firegear Outdoors dealer/distributor.
Each accessory comes with a separate installation manual. Read each instruction thoroughly before installing.

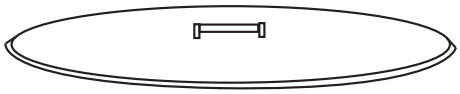

Stainless Round Lids for 19 - 33" Pits,
Models: LID-19R, LID-25R, LID-29R2, LID-33R2

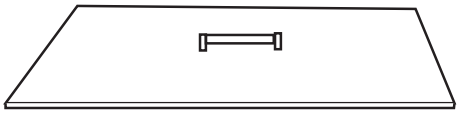

Stainless Square Lids for 20" Pits
Models: LID-20S, LID-26S, LID-32S

Media

Lava Stones 1" to 2" size (50lbs.)
Models: FG-LS50 (Bag)

***Glass Media** - See catalog for various colors. Comes in 10lb jugs*

Lava Rock 1" to 2" size

Models: FG-LAVA-40 (bag)
FG-LAVA-10 (jug)

Paver Control Panels

Model: PAVER-CP-TPSI
Provides a means to to install gas valve/Piezo control into an enclosure

Vent Kits
Model: VENT-KIT-6X12SS
(provides 18 sq. in of ventilation per side of enclosure)
Model: PAVER-VENT-4-LNTS
Model: PAVER-VENT-6-LNTS

Shut-Off Valves
Model: 01-387 ⅜" OD Flare x ½" FIP
Model: 01-487 ½" OD Flare x ½" FIP
Model: 01-266
⅜" OD Flare x ⅜" OD Flare
Model: 01-288
½" OD Flare x ½" OD Flare

E-STOP
Mechanical gas timer valve with emergency shut-off.

Model: ESTOP1-0H 1hr. timer

FLEXFRAME
Universal brackets to support fire pit when using paver blocks or other non-combustible enclosures.

Model: FLEXFRAME-SS (2 piece)
Model: FLEXFRAME-SS3 (3 piece)

Natural Gas to LP Conversion Kits
Models:
TPSI-LPK29 - 150K Btu models
TPSI-LPK31 - 125,000 Btu models
TPSI-LPK35 - 100,000 Btu models
TPSI-LPK41 - 75,000 Btu models
TPSI-LPK47 - 50,000 Btu models
- Kits include main burner orifice and PSE-SUB163 pilot orifice.

Log Sets
Model:
L-SF (Spit Fire) - 17pc (52lbs)
L-Sedona (Sedona) 19pc (200lbs)
See catalog for various styles

Paver Kit

Description: For installation into a paver block assembly.

Model: PAVER-CP-TPSI

NOTE: See the Firegear catalogue for other accessories also available.

FOR TECHNICAL SERVICE, CALL:

Firegear Outdoors, an Earthcore Industries Brand
1600 Riverfork Drive
Huntington, IN 46750
260-388-5653
techsupport@firegearoutdoors.com

Manual changes often occur, ensure to check the Firegear website for any recent updates and warranty information.

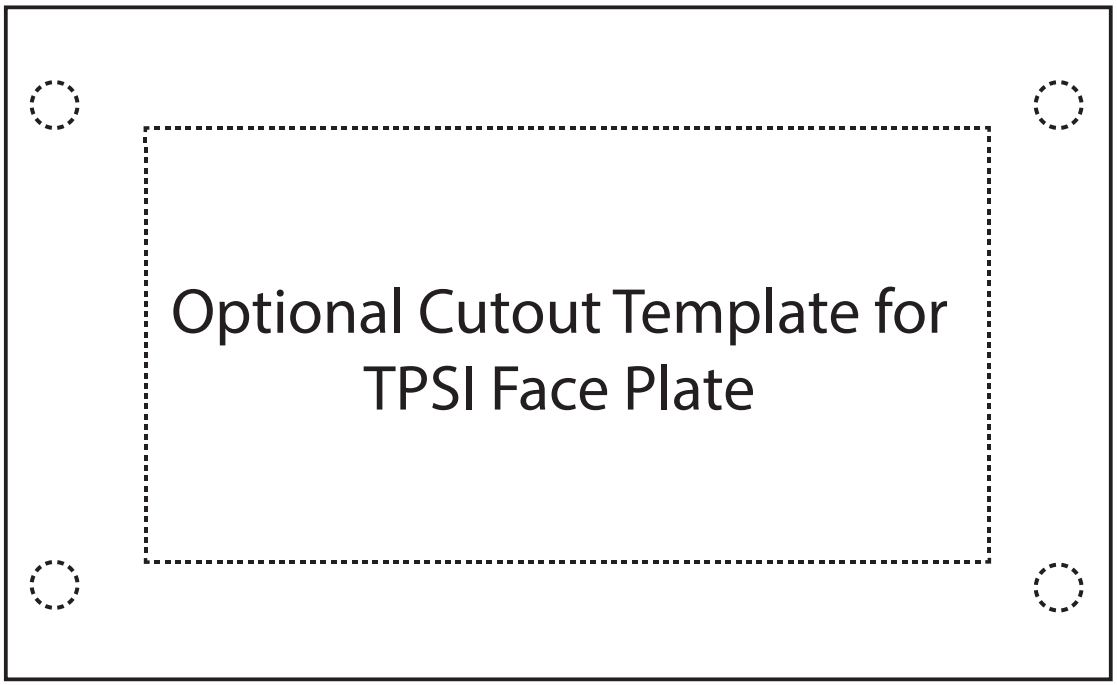

This fire pit instruction provides an option to mount the TPSI face plate to concrete board. Use the template above to complete the installation.

The TPSI face plate can be mounted vertically or horizontally. Our suggestion is to attach the face plate in a horizontal position with the gas valve on the left side. This allows the control knob text to be orientated in a position to be easily read.

Using scissors carefully cutout the template and trace it on your concrete board. The dotted line provides the cutout area to mount face plate. Use a concrete drill bit to drill (4) 3/16" diameter holes. Install the 1¼" black oxide screws through the front of the faceplate with the nuts and washers on the backside. These are all provided in the hardware bag. **Note:** Mounting plate can also be installed into a paver control panel (PAVER-CP-MT) bracket system.

CAUTION: Careful not to over-tighten screws and nuts to ensure the cement board does not crack or break.

FIREGEAR

LIMITED WARRANTY

Firegear Outdoors hereby warrants to the end user that products will be free from material and workmanship defects that prevent safe and correct operation of the product. The warranty commences from date of sale to the end user for the following period:

ALL WARRANTIES WITHIN THIS DOCUMENT ONLY APPLY TO PRODUCTS MANUFACTURED AFTER | 01 / 01 / 2026

BURNER SYSTEMS I BURNERS I COMPONENTS I ACCESSORIES TYPE OF PRODUCT	CONSUMER APPLICATIONS	COMMERCIAL APPLICATIONS
Construction and Manufacturer Defects	Lifetime Warranty	2 Year Warranty
Stainless Steel Burners and Pans	Lifetime Warranty	2 Year Warranty
Pro Series Burners	Lifetime Warranty	2 Year Warranty
Gas Valve, Spark Igniter, and Pilot Assemblies	5 Year Warranty	2 Year Warranty
AWS Electronic Ignition Systems (12 VAC, 24 VAC, 30 VAC)	3 Year Warranty	1 Year Warranty
TPSI Electronic Components	5 Year Warranty	2 Year Warranty
MT Components (Key Valve)	5 Year Warranty	2 Year Warranty
Refractory Gas Log Sets	5 Year Warranty	2 Year Warranty
Skytech Manufactured Optional Controls	2 Year Warranty	1 Year Warranty

OUTDOOR FIREPLACE I KALEA BAY TYPE OF PRODUCT	CONSUMER APPLICATIONS	COMMERCIAL APPLICATIONS
Construction and Manufacturer Defects	Lifetime Warranty	Lifetime Warranty
Stainless Steel Components	Lifetime Warranty	Lifetime Warranty
Gas Valve, pilot Assembly, Power Supply, and Controls	5 Year Warranty	2 Year Warranty
Skytech Manufactured Optional Controls	5 Year Warranty	2 Year Warranty

SANCTUARY SERES - GFRC FIRE FEATURES TYPE OF PRODUCT	CONSUMER APPLICATIONS	COMMERCIAL APPLICATIONS
GFRC Structure * The warranty covers manufacturing defects or structural failure. Small stress cracks and surface crazing are a natural occurrence in GFRC products and are not covered within this warranty. Discoloration over time is a natural process and is not covered by this warranty	* 3 Year Warranty	* 3 Year Warranty
Burner System ** Please refer to your burner system warranty for more information about your warranty.	** Refer to Burner System	** Refer to Burner System

ACCESSORIES TYPE OF PRODUCT	CONSUMER APPLICATIONS	COMMERCIAL APPLICATIONS
Construction and Manufacturer Defects	Lifetime Warranty	Lifetime Warranty
Stainless Steel Components (Lids, Stainless Steel Covers)	Lifetime Warranty	Lifetime Warranty
ESTOP1-0H, Windshields, Hoses & Regulators	1 Year Warranty	1 Year Warranty

For additional details, please refer to the products installation manual

The end-user must provide a bill of sale, canceled check, or payment record to verify the purchase date and to establish the warranty period. This Limited Warranty shall be valid and limited to the original purchaser only.

WARNING: Any modification to the product will void the warranty.

This Limited Warranty shall be limited to the repair and/or replacement of parts that have been proven to be defective under normal use and service. All warranty claims must be made by the Distributor/Dealer account on behalf of the end-user. You may contact Technical Support at 800-966-8126.

Our Technical Service Department must confirm all approved defects. If a defect is confirmed and we approve the claim, we will replace such parts without charge. This warranty gives you specific legal rights, and you may also have other rights, which vary from state to state.

The manufacturer may request defective products returned with an RMA (Return Merchandise Authorization) issued by Firegear Outdoors for specific products, which is considered to be the nature of the defect and or warranty claim. Product to be returned should; be packed so as not to incur damages during transportation. Firegear Outdoors is not responsible for damages on returned items. RMA is valid for thirty (30) days from the date issued. The RMA must be clearly marked on the outside of the package.

Please check with your local building code department or governing agency for proper approvals before purchasing. Firegear Outdoors is not responsible for any violation of local codes.

Travel, diagnostic cost, service labor to repair the defect on warranty parts to and from the factory will be the responsibility of the owner. We will not be responsible for labor charges and/or damage incurred in installation, repair, and replacement. Firegear Outdoors is not responsible for Issues related to gas or electrical installation.

The Limited Warranty is voided if not assembled, installed, and operated as intended. This Limited Warranty does not cover any defects due to accident, abuse, misuse, alteration, misapplication, vandalism, improper installation or improper maintenance or service, removal from the original location, or re-installation into another location, or failure to perform normal and routine maintenance.

Damage due to severe weather conditions such as hail, hurricanes, earthquakes, tornadoes, discoloration due to overheating, exposure to chemicals (including chlorine and salt), either directly or in the atmosphere, or very high humidity, is not covered by this Limited Warranty. Coastal, humid and/or salt environments are subject to manufacturer review. All out-of-box claims must be made within 30 days of purchase and must be made prior to installation. Any product installed damaged will be considered damaged during installation and not covered under warranty.

There are no other express warranties except as set forth herein. For consumer applications, any applicable implied warranties of merchantability and fitness are limited in duration to the period of coverage of this Limited Warranty. Some states do not allow limitation on how long an implied warranty lasts, so this limitation may not apply to you.

For Commercial Applications, the liability of Firegear Outdoors is limited to the express terms of this warranty. We expressly disclaim any and all implied warranties, including any warranties of fitness for a particular purpose or merchantability.

We are not liable for any special, indirect or consequential damages. Our maximum liability is limited to the purchase price of the purchased units. Some states do not allow the exclusion or limitation of incidental or consequential damages, so this limitation or exclusion may not apply to you.

We do not authorize any person or company to assume for it any other obligation or liability in connection with the sale, installation, use, removal, return, or replacement of its equipment, and or such representation are binding.

FIREGEAR
Firegear Outdoors
1600 Riverfork Dr. East
Huntington, IN 46750

www.firegearoutdoors.com

NOTES:

Having problems getting the fire pit to operate? Don't leave the job site! We want to help! Call 260-355-5577 for Technical Support between the hours of 8:30AM to 4:30PM

BEFORE YOU CALL WE WILL NEED THIS INFORMATION

1. Model Number: _____
2. Serial Number: _____
3. How long is the gas line run? Nat Gas ____ LP Gas ____
4. What size is gas line? _____
5. Inlet Gas Pressure: _____WC
   Manifold Gas Pressure: _____ WC
6. What type of media are you using? _____
7. Review the troubleshooting section in the installation manual.
8. What are the symptoms? Please be prepared to explain.
9. Be prepared to send photos to us when on the phone.
10. Found missing or damaged parts? Let us know ASAP or send photos.