FIREGEAR® by earthcore®

DO NOT DISCARD. THIS MANUAL HAS IMPORTANT OPERATING AND MAINTENANCE INSTRUCTIONS. LEAVE WITH THE HOMEOWNER.

MODEL:

SERIAL #:

Certified by **Lab Test Certification** for USA and Canada. Meets: ANSI Z21.972014, CSA C22.2 No. 3-M1998 (R2014).

c LC US

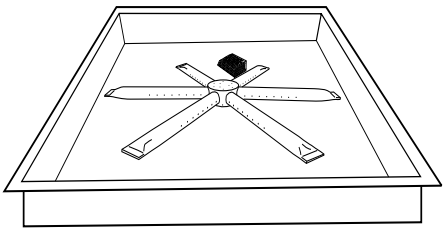

Square Drop In Pan

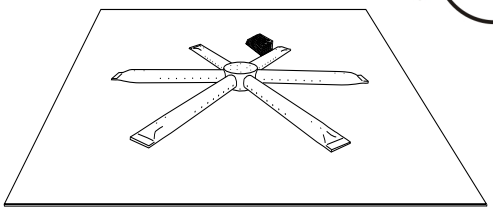

Square Flat Disc

Natural Models	Propane Models	Description
FPB-20SBSAWS-N	FPB-20SBSAWS-P	20” Square Pan with 16” Spur Burner
FPB-26SBSAWS-N	FPB-26SBSAWS-P	26” Square Pan with 22” Spur Burner
FPB-32SBSAWS-N	FPB-32SBSAWS-P	32” Square Pan with 31” Spur Burner
FPB-38SBSAWS-N	FPB-38SBSAWS-P	38” Square Pan with 36” Spur Burner
FPB-25SFBSAWS-N	FPB-25SFBSAWS-P	25” Square Flat Disc with 22” Spur Burner
FPB-30SFBSAWS-N	FPB-30SFBSAWS-P	30” Square Flat Disc with 22” Spur Burner
FPB-34SFBSAWS-N	FPB-34SFBSAWS-P	34” Square Flat Disc with 31” Spur Burner
FPB-40SFBSAWS-N	FPB-40SFBSAWS-P	40” Square Flat Disc with 36” Spur Burner
FPB-46SFBSAWS-N	FPB-46SFBSAWS-P	46” Square Flat Disc with 36” Spur Burner

Outdoor Square Pan & Flat Disc Fire Pits with All Weather System (AWS)

Installation and Operating Instructions

IF YOU CANNOT READ OR UNDERSTAND THESE INSTALLATION INSTRUCTIONS DO NOT ATTEMPT TO INSTALL OR OPERATE THIS APPLIANCE

INSTALLATION PRECAUTION:

This system requires a minimum 18-square inches (per side) of cross ventilation. Failure to provide proper ventilation will void the warranty.

Warning: For Outdoor Use Only

NATIONAL FIREPLACE INSTITUTE NFI CERTIFIED www.nficertified.org

We recommend that our gas hearth products be installed and serviced by professionals who are certified in the U.S. by the National Fireplace Institute® (NFI) as NFI Gas Specialists.

DANGER

CARBON MONOXIDE HAZARD

This appliance can produce carbon monoxide which has no odor.

Using it in an enclosed area can kill you.

Never use this appliance in an enclosed space such as a camper, tent, car or home.

DANGER

FIRE OR EXPLOSION HAZARD

If you smell gas:

1. Shut off gas to the appliance.
2. Extinguish any open flame.
3. If odor continues, leave the area immediately.
4. After leaving the area, call your gas supplier or fire department.

WARNING

Do not leave unattended during use.
Do not use for cooking.
Follow all gas leak procedures in this manual prior to operation.

WARNING

If the information in this manual is not followed exactly, a fire or explosion may result causing property damage, personal injury, or **loss of life**.

FOR YOUR SAFETY

Do not store or use gasoline or other flammable vapors and liquids in the vicinity of this or other appliances.

WARNING

Do not store or use gasoline or other flammable vapors and liquids in the vicinity of this or any other appliance.

An LP cylinder not connected for use shall not be stored in the vicinity of this or any other appliance.

WARNING

Improper installation, adjustment, alteration, service or maintenance can cause injury or property damage, personal injury or loss of life
Read the owner's information manual provided with this appliance.
Installation and service must be performed by a qualified installer, service agency, or the gas supplier.

CALIFORNIA PROPOSITION 65

WARNING

This product is designed to operate with one of the following fuel sources: Liquid Propane or Natural Gas. The fuel used to operate this product, and the products of combustion of such fuel, can expose you to chemicals including Benzene which is known to the State of California to cause cancer, birth defects and other reproductive harm and Carbon Monoxide which is known to the State of California to cause birth defects or other reproductive harm.

(For more information go to: www.p65Warnings.ca.gov.)

TABLE OF CONTENTS

Specifications	4
Preparing a Non Combustible Structure	5
Carton Contents - Single Fire Feature	5
Ventilation; High Elevation; Hard Piping	5
Gas Pipe Sizing Chart	6
Carton Contents - Removing Fire Pit from Carton	7
Pre-Installation Check List for Single Installation	8
Power Supply Location for Single Installation	9
Installing Key Valve	10
Installing Media	11
Wiring Diagrams	12
Operating Instructions	13
Replacements Parts	14
Replacement Parts List	15
Trouble Shooting	16-18
Optional Accessories	19
Maintenance	19
Warranty	20

CAUTION

All media (i.e. lava rock, lava stones, lava boulders and fire glass) has the potential of thermal spalling. This is a process that may occur when media is wet and moisture gets trapped inside of the material due to rapid temperature differences. When this happens the media has the potential to crack or "pop" outside the fire feature.

WE HIGHLY RECOMMEND COVERING ALL FIRE FEATURES WHEN NOT IN USE

The use of a cover can lessen the impact of thermal spalling; however, heavy rains, high humidity and the presence of moisture may still cause the media to pop.

ALWAYS USE CAUTION WHEN USING THE FIRE FEATURE

Extra caution should be taken when lighting a fire feature when heavy rains, high humidity and moisture are present. Light the fire feature; leave the area allowing any moisture in the media to dissipate. We strongly recommend that during this drying out time that you monitor the fire feature from a distance. This drying out period should be no less than 30 minutes. Continue monitoring the flame from distance to ensure that all popping has ceased before fully enjoying the fire.

SPECIFICATIONS

Model: Natural Gas	**Model:** Propane Gas	**A** Depth	**B** Min/Max Opening or Dimension	**C** Inside/ Outside Dim.	**D** Ground Level	**E** Side Wall	**F** Combustible Ceiling	**G** Combustible Floor
FPB-20SBSAWS-N	FPB-20SBSAWS-P	2½"	20 ¼"- 21"	20"ID	18"	36"	96"	18"
FPB-26SBSAWS-N	FPB-26SBSAWS-P	2½"	26 ¼"- 27"	26"ID	18"	36"	120"	18"
FPB-32SBSAWS-N	FPB-32SBSAWS-P	2½"	32 ¼"- 33"	32"ID	18"	36"	120"	18"
FPB-38SBSAWS-N	FPB-38SBSAWS-P	2½"	38 ¼"- 39"	38"ID	18"	36"	120"	18"
FPB-25SFBSAWS-N	FPB-25SFBSAWS-P	1/16"	23" x 23"	25"OD	18"	36"	120"	18"
FPB-30SFBSAWS-N	FPB-30SFBSAWS-P	1/16"	28" x 28"	30"OD	18"	36"	120"	18"
FPB-34SFBSAWS-N	FPB-34SFBSAWS-P	1/16"	32" x 32"	34"OD	18"	36"	120"	18"
FPB-40SFBSAWS-N	FPB-40SFBSAWS-P	1/16"	38" x 38"	40"OD	18"	36"	120"	18"
FPB-46SFBSAWS-N	FPB-46SFBSAWS-P	1/16"	46" x 46"	48"OD	18"	36"	120"	18"

Table 1 Installation specifications

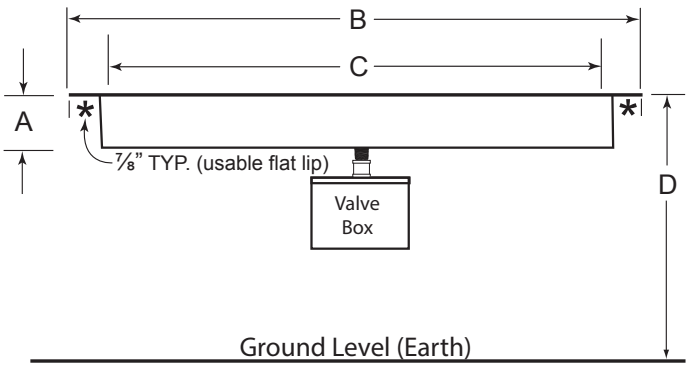

Fig. 1 Shows pan on top view and disc on bottom view.

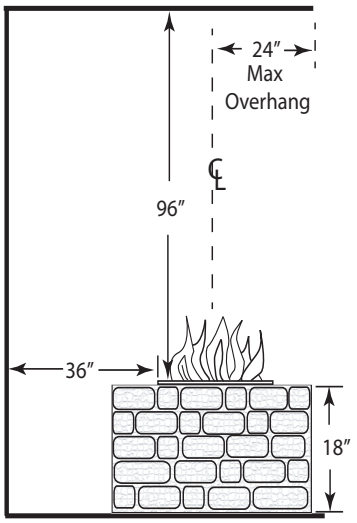

Fig. 2 Clearance to Combustibles
(Not to be used in an enclosed space)

Model: Natural Gas	**Orifice Size #**	***Model:*** Propane Gas	**Orifice Size #**	***Btu's***
FPB-20SBSAWS-N	29	FPB-20SBSAWS-P	41	75,000 (21.98KW)
FPB-26SBSAWS-N	16	FPB-26SBSAWS-P	31	125,000 (36.63kW)
FPB-32SBSAWS-N	5	FPB-32SBSAWS-P	26	175,000 (51.28kW)
FPB-38SBSAWS-N	25/34"	FPB-38SBSAWS-P	12	250,000 (73.26kW)
FPB-25SFBSAWS-N	16	FPB-25SFBSAWS-P	31	125,000 (36.63kW)
FPB-30SFBSAWS-N	16	FPB-30SFBSAWS-P	31	125,000 (36.63kW)
FPB-34SFBSAWS-N	5	FPB-34SFBSAWS-P	26	175,000 (51.28kW)
FPB-40SFBSAWS-N	25/64"	FPB-40SFBSAWS-P	12	250,000 (73.26kW)
FPB-46SFBSAWS-N	25/34"	FPB-46SFBSAWS-P	12	250,000 (73.26kW)

Table 2 Btu Specifications for Burner Spur by AMD Direct

Disclaimer: Btu listings are based on 7.0"WC for Natural Gas and 11.0"WC for Liquid Propane (LP) at the burner orifice when using AMD Direct Burning Spurs. If you use a burner other than a Burning Spur, Btu's will vary.

Note: Flex line size and proper gas pipe sizing will also affect Btu's. As a result your Btu's may vary slightly from Table 2 specifications.

Pressure	**NG**	**LP**
Min. Inlet	3.5" WC (⅛ PSI) (0.87kPa)	8.0" WC (⅓ PSI) (1.99kPa)
Max. Inlet	14.0" WC (½ PSI) (3.48kPa)	14.0" WC (½ PSI) (3.48kPa)
Normal Inlet	7.0" WC (¼ PSI) (1.74 kPa)	11.0" WC (⅓ PSI) (2.73 kPa)

Table 3 Gas Pressures

DESCRIPTION This is a field serviceable (30VDC) commercial grade outdoor electronic system with a maximum gas capacity of 290,000 Btu's and it is shipped as a Natural Gas (NG) model. It must be installed with a burner pan, burner, orifice and installed into a non-combustible enclosure. The "All Weather System" (AWS) requires a 120VAC Ground Fault Interrupter (GFI) to be installed in a weatherproof box. The power supply Model #GOE-30VDC is used for a single installation greater than 10-feet or more from pools or spas.

In the absence of local codes use the latest edition of the National Fuel Gas Code NFPA54 and National Electrical Code (NEC), or NFPA 70. The weatherproof box (supplied) should be mounted securely within 6-feet of the GFI box. The GFI box can power the adapter and optional remote control receiver, if applicable. **Note**: Gas line must be bonded at EACH FIRE FEATURE. See NEC- 680.26B

READ THIS MANUAL COMPLETELY BEFORE BEGINNING INSTALLATION. UNDERSTAND HOW THEY OPERATE AND INSTALL.

VENTILATION FOR NON-COMBUSTIBLE ENCLOSURE

Fire features are subjected to many outdoor elements such as rain, snow, wind, heat or cold. **A minimum of 18 square inches (opposite sides) of cross ventilation is required to keep the components in good working order.** Use Fig. 3 on as guide to assist to incorporate proper ventilation.

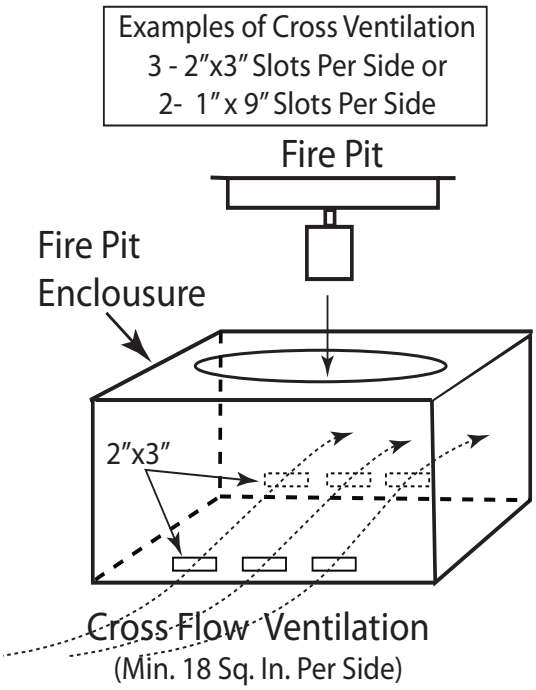

Fig. 3 Shows cross ventilation for a linear enclosure.

LEVEL FLAT SURFACE

Install fire feature on any level, outdoor non-combustible, flat stable surface or a combustible floor according to the clearances specified in this manual for a Firegear burner. **NOTE**: Depending on venting locations, do not place fire pit directly on grass, dirt, or rocks that could prevent proper ventilation. **Ensure proper water drainage is also incorporated into the fire feature enclosure.**

HIGH ELEVATION INSTALLATION

This appliance is listed for elevations from 0- 4500 feet in Canada and the U.S. If elevation exceeds 4500 feet it may be necessary to decrease the input rating by changing the existing burner orifice to a smaller size. Input should be reduced 4% for each 1000 feet beyond the 4500 feet above sea level. Check with your local gas utility for assistance in determining the proper orifice in your location. In some cases the heating value may already be reduced and downsizing the orifice may not be necessary.

HARD PIPING TO FIRE FEATURE WITHOUT GAS PROXIMITY

NOTE: Refer to the NFPA54 (National Fuel Gas Code) for proper pipe sizing. See gas line sizing chart on page 7 as a reference.

1. Turn **OFF** gas supply system. **NOTE**: All gas connections (except for brass to brass) require the following. Clean pipe threads using either a wire brush or steel wool. Apply pipe sealant to the fittings before making any connection.
2. Ensure all gas connections are snug, but do not over tighten! **BE CAREFUL!**
3. Install necessary pipe for the distance required and a manual shut-off valve at the exterior house wall. Check with local codes for proper procedures. If pipe is to pass through a foundation or house wall, make sure to seal the area around the pipe with weather sealant. Consult a plumber for proper installation to ensure you are providing adequate gas supply for your application.
4. The primary gas shut-off (not supplied) will require a ½" male flared fitting to enable connection of the stainless steel flex gas line (not supplied) with the fire feature (see Fig. 5 page 9).
5. Do not place an LP tank inside any fire pit enclosure. Locate all Liquid Propane (LP) tanks outside the enclosure.
6. To prevent performance problems with LP gas fire pits, do not use a LP tank less than 100lbs. capacity.

IMPORTANT
Installation of Natural or LP gas should be done by a qualified installer, service agency or gas supplier.
This appliance must be isolated from the gas supply piping system by closing its manual shutoff valve during any pressure testing of the gas supply piping system at test pressures equal to or less than ½" psi (3.5kPa)

GAS PIPE SIZING CHART

NATURAL GAS : PIPE SIZING CHART

Length of Pipe in Feet	1/2"	3/4"	1"	1 - 1/4"	1 - 1/2"	2"	2 - 2 1/2"	3"	4"
10	108	230	387	793	1237	2259	3640	6434	-
20	75	160	280	569	877	1610	2613	5236	9521
30	61	129	224	471	719	1335	2165	4107	7859
40	52	110	196	401	635	1143	1867	3258	6795
50	46	98	177	364	560	1041	1680	2936	6142
60	42	89	159	336	513	957	1559	2684	5647
70	38	82	149	317	476	896	1447	2492	5250
80	36	76	140	239	443	840	1353	2315	4900
90	33	71	133	275	420	793	1288	2203	4667
100	32	68	126	266	411	775	1246	2128	4518
125	28	60	117	243	369	700	1143	1904	4065
150	25	54	105	215	327	625	1008	1689	3645
175	23	50	93	196	303	583	993	1554	3370
200	22	47	84	182	280	541	877	1437	3160
300	17	37	70	145	224	439	686	1139	2539

- Natural Gas (NG) flow is given in thousands of BTU/hr. = 1 cubic foot of NG gas - 1000 BTU
- Nominal pressure at the burner for Natural Gas is 3.5" of water column. (Typical machine supply 5"-7")
- Pipe length must include additional length for all fittings. Add approximately 5 feet of pipe per fitting.
- Natural Gas Example: A machine with a burner that requires 440,000 BTU would need a 1 -1/4" pipe for a 20" long run.

LIQUID PROPANE : PIPE SIZING CHART

Length of Pipe in Feet	1/2"	3/4"	1"	1 - 1/4"	1 - 1/2"	2"	2 - 2 1/2"	3"	4"
10	275	567	1071	2205	3307	6221	10140	17990	35710
20	189	393	732	1496	2299	4331	7046	12510	25520
30	152	315	590	1212	1858	3465	5695	10110	20620
40	129	267	504	1039	1559	2992	4778	8481	17300
50	114	237	448	913	1417	2646	4343	7708	15730
60	103	217	409	834	1275	2394	3908	6936	14150
70	89	185	346	724	1086	2047	3329	5908	12050
80	78	162	307	630	976	1811	2991	5309	10830
90	69	146	275	567	866	1606	2654	4711	9613
100	63	132	252	511	787	1496	2412	4281	8736
125	54	112	209	439	665	1282	2083	3618	7382
150	48	100	185	390	590	1138	1808	3210	6549
175	43	90	168	353	534	1030	1637	2905	5927
200	40	83	155	325	491	947	1505	2671	5450
300	37	77	144	303	458	887	1404	2492	5084

- Liquid Propane (LP) Gas flow is given in thousands of BTU/hr. = 1 cubic foot of LP gas - 2500 BTU.
- This chart refers to low pressure LP after regulation, Standard nominal pressure at the burner for Liquid Propane Gas is 11" of water column.
- Pipe length must include additional length for all fittings. Add approximately 5 feet of pipe per fitting.
- LP Example: A machine with a burner that requires 440,000 BTU would need a 1" pipe for a 20' long run.

NOTE: The sizing charts above list the specific pipe sizes required for the amount of BTU's for a new gas line installations. If you are using an existing gas line you must take into consideration the existing gas line capacities to ensure you will have proper pressure. This chart is for reference only, we recommend you consult with a Licensed Plumber/Gas Fitter or NFPA54 (National Fuel Gas Code - current edition) for more details.

Table 4 Gas Pipe Sizing Chart

REMOVING FIRE PIT ASSEMBLY FROM CARTON

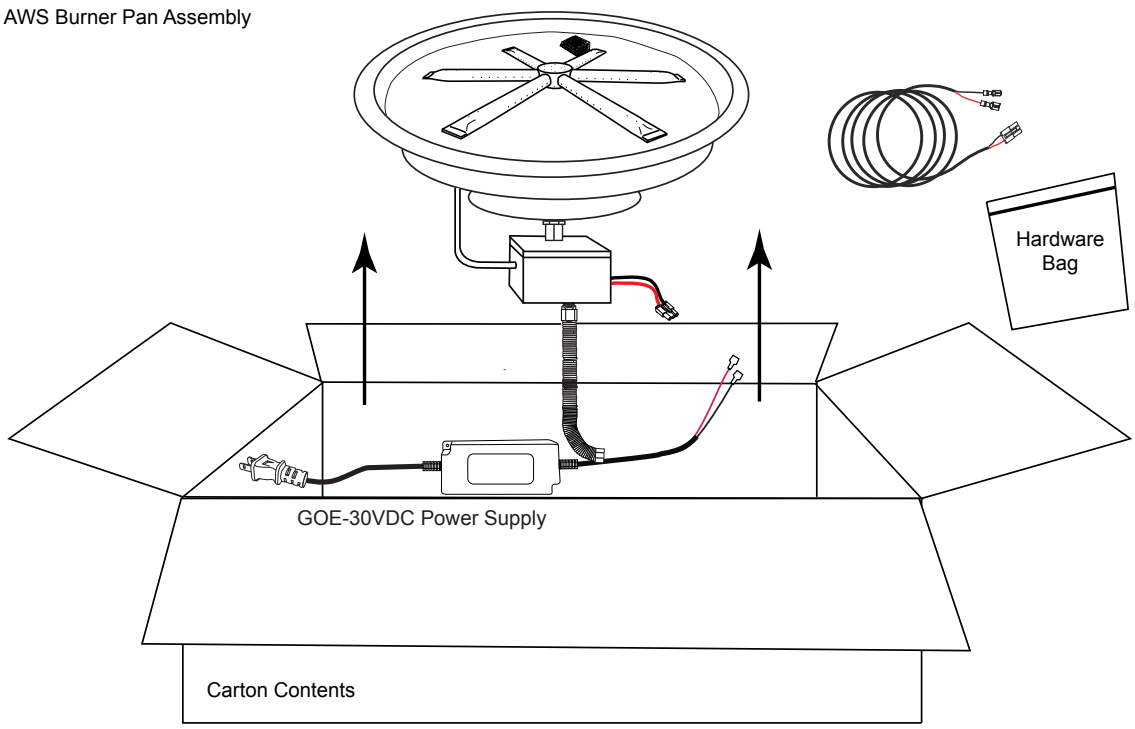

Fig. 4 Shows carton contents. **Note**: Round pan was illustrated for this drawing.

These fire pits includes a valve and control system that is certified by Lab Test for USA and Canada to meet ANSI Z21:.97-2014, CSA C22.2 No 3-M1998 (R2014)

The fire pit comes assembled and only minimal wire connections and gas hook up is required after it is installed into the enclosure.

Open carton and remove contents. Inspect for any damage or missing parts. The hardware bag includes the key valve parts shown below in Fig. 4.

Note: Check for any gas leaks after gas is connected and turned ON.

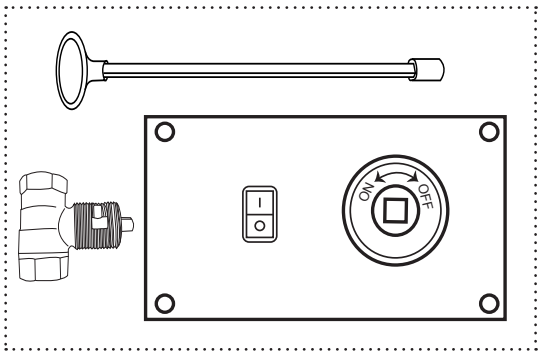

Hardware Bag
(included with fire pit)

Fig. 5 Hardware bag contents.

CAUTION: Use dielectric grease on all wire nut connections and ¼" connectors to prevent moisture issues from the outdoor environment.

The AWS system is polarity sensitive. There is a red sleeve attached to the positive (+) side of the adapter. When wiring the remote control receiver, one red wire from the receiver connects to the adapter with the red sleeve. The other red wire of the receiver connects directly to the red wire from the gas valve control box. See Figs. 9 and 10 on page 11.

Carefully install the fire pit into the prepared enclosure, connect the gas line and wire according to the figure drawings in this manual.

ALL PANS OR FLAT DISC'S MUST BE REMOVABLE FOR SERVICE Pans or disc's CAN NOT be installed in a manner to prevent them from being removed for service.

Top coping material or top cap of fire pit MUST NOT overlap onto the pan or disc surface. Pan lip or disc edge must be unobstructed so it can be lifted out of the fire pit for servicing.

PRE-INSTALLATON CHECK LIST FOR SINGLE INSTALL

GAS INFORMATION

Gas Volume - Ensure the correct size pipe is used for the total gas load. If installing more than one fire feature, ensure the correct size pipe is based upon the distance of the furthest fire feature away and the total gas load is for all gas appliances on that gas line (i.e. fire feature, BBQ, torches, etc.).

Gas Pressure & Type of Gas - What is the gas pressure being supplied to the fire features? Is the fire feature(s) configured for the proper gas type? The AWS gas valve is shipped for Natural gas. To convert to Propane (LP) gas, the secondary pilot orifice must be changed.

Manual Shut-off/Key Valve - Is there a manual shut-off or key valve installed within 6-feet of the fire feature? Did you verify proper distance with local and national codes?

Purging a New Gas Line - Has the gas line been purged of both air and possible debris? Any gas lines buried underground must be pressure tested up to 60PSI to ensure no leaks. After inspection is complete, most plumbers will release pressure in the line at one location by opening the manual ball/key valve. It is recommended to release pressure by opening a ball/key valves associated with all the fire features. ***Example***: There are four fire features on a job, open the first key valve for a few seconds, then close it. Then move on to the next key valve and do the same thing until you have purged the debris out of all four gas lines.

Main Burner Orifice - All fire features **MUST** have a main burner orifice installed on the inlet side of the burner. An orifice limits the amount of gas flow to the burner to ensure the flame is a safe and reasonable height to not pose a risk to people or property. The drawings below show the difference between a Natural gas and Propane (LP) orifice. Because LP gas does not burn as clean as Natural and requires ventilation holes at the base of the orifice to provide a cleaner flame. See Fig. 4.

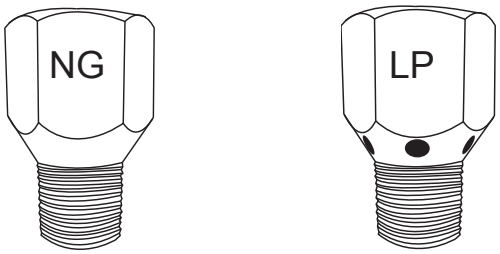

Fig. 4 Natural (NG) orifiice on left; LP (vent holes) on right.

ELECTRICAL INFORMATION

Wire Gauge - Is the wire gauge correct? Wiring must be 12AWG or greater (solid or stranded) for all installations.
Note: It is recommended to fill the wire nuts with either dielectric grease or silicone prior to installing the wire nut. This will ensure a waterproof connection.
Why GFI circuit? A GFI is a type of circuit breaker which shuts off electric power when it senses an imbalance between the outgoing and incoming current. It protects the house wires and receptacles from overheating and possible fire.

Power Supply - AMD Direct offers two power supplies for use with the fire features. Each power supply requires 120VAC power to operate and converts it to 30VDC to operate the gas valve. **DO NOT CONNECT 120VAC DIRECTLY TO THE GAS VALVE WIRES - DAMAGE WILL OCCUR.** The #GOE-30VDC is used for one fire feature only - installed 10-feet or greater from a pool or spa. This power supply has a 3-foot power cord to plug into 120VAC outlet and a 3-foot leads to connect to the gas valve on the 30VDC side.

The FG-AWS-PS-30V320 model has an 8-foot power cord and can be used for one or a maximum of four fire features. The maximum distance the furthest fire feature can be from the power supply is 500-feet. In addition, the FG-AWS-PS-30V320 model enables a fire feature to be installed within 5-feet of a pool or spa.

Bonding - Gas lines must be bonded AT EACH fire feature. (Refer to National Electric Code 2017 Section: 680.26(B).

MEDIA INFORMATION

Acceptable media placed over top of the burner:

Lava Rock 1”- 2” size
FG-LAVA-10 (10 LB Bag)
FG-LAVA-40 (1 Cubic Foot)

GL Glass ½” - ¾” size
Various colors are available
See Product catalog for details
Sold in 10 LB jugs or 6 jugs per box/case

GRL Reflective Glass ½” - ¾” size
Various colors are available
See Product catalog for details
Sold in 10LB jugs or 6 jugs per box/case

DRAINAGE INFORMATION

For any fire feature ABOVE ground level requires a drain line or a way for water to exit the fire feature.

Note: This AWS system is not approved to be installed BELOW ground level.

POWER SUPPLY LOCATION

The GOE-30VDC power supply is to be installed inside the enclosure due to the wire length limitations. The power cord is 3-feet long the 30VDC leads to the valve are 3-feet long. See Fig. 5.

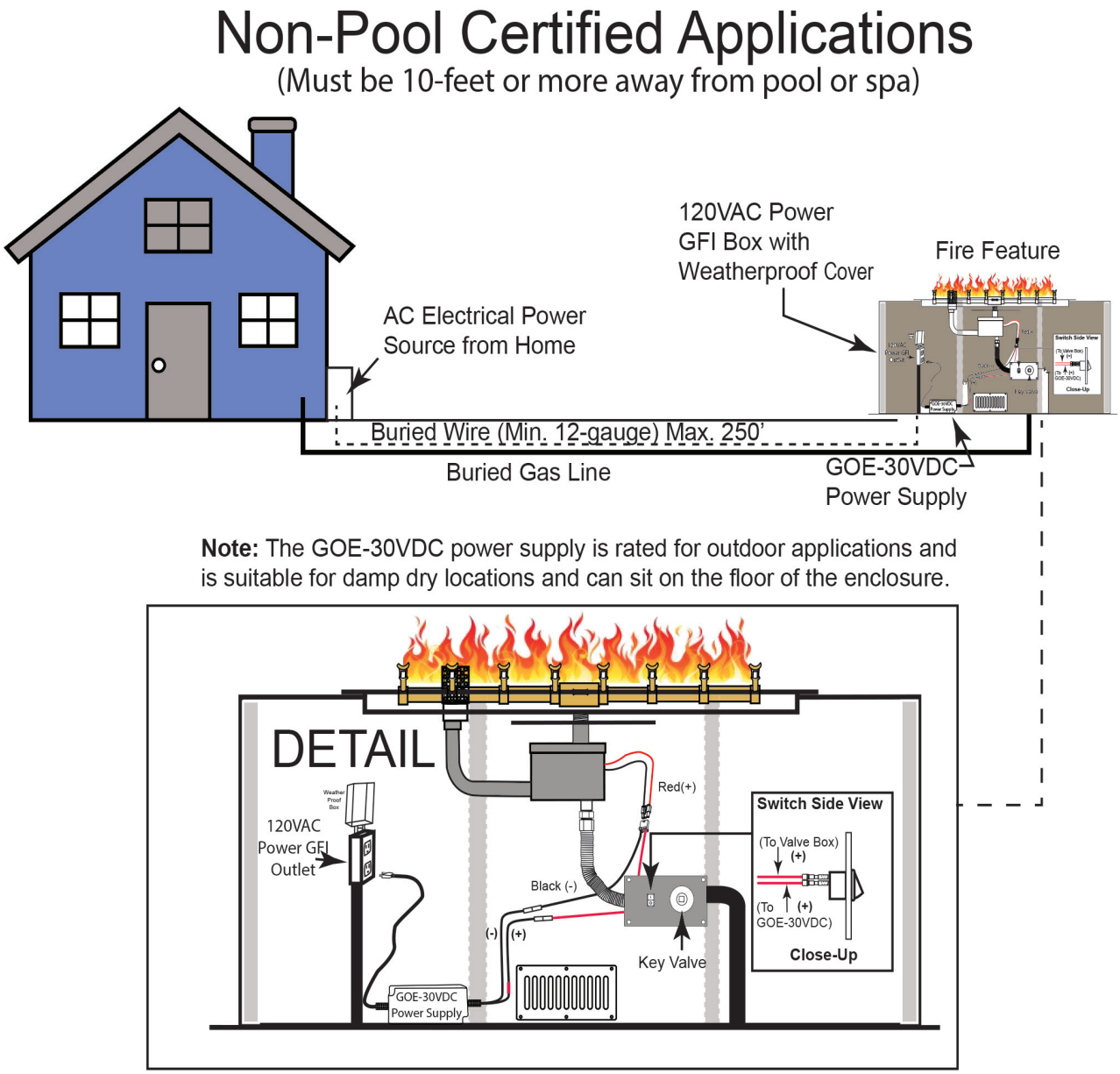

Fig. 5 Example of a single fire feature install with power supply and switch contained within the enclosure, when applicable. **Note**: Must be 10-feet or more from a pool/spa for this installation.
See additional illustration on page 10, Fig. 8.

INSTALLING MANUAL KEY VALVE

The key valve contents: (1) key valve, (1) 12-inch key and (1) flange. See Fig. 19. The valve requires a 1¼" round clearance hole in the non-combustible enclosure wall. See the instructions supplied with the key valve for more specific details. **Note:** Be sure to leak test all fittings before operating.

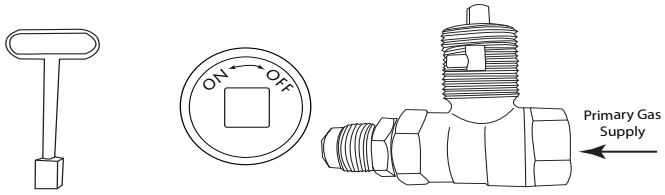

Fig. 19 Key valve components

Depending on the enclosure being used, the key valve can be installed in various methods. The flange threads onto the valve as shown and comes with one fitting to attach the flex gas line that is supplied with the fire pit. The primary gas line fitting (not supplied) is left up to the plumber to supply depending on the connection needed for the installation See Fig. 20.

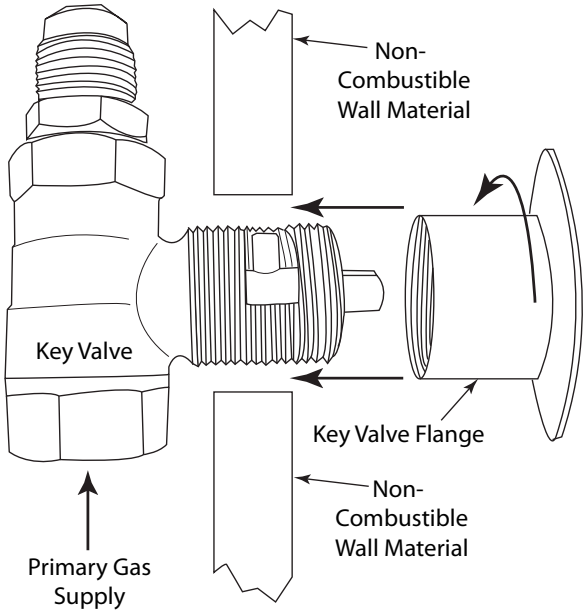

Fig. 20 Key valve components

Note: A 1¼" x 2" black iron or galvanized coupler/nipple (not supplied) can be used as a spacer between the manual valve and the valve flange to add additional support to hold the manual key valve in place, if needed. See Fig. 21.

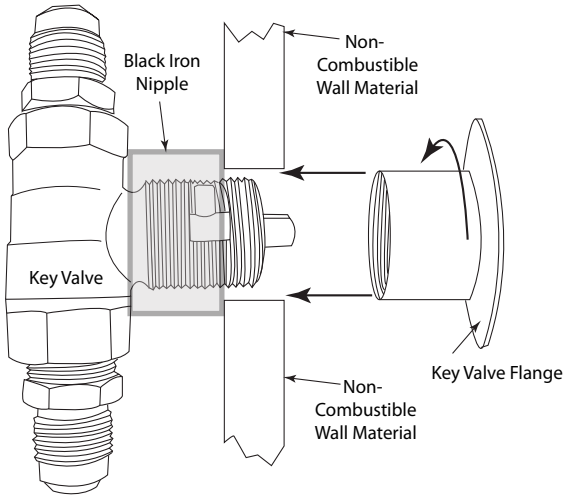

Fig. 21 Key valve using nipple as additional support

Before the fire pit is set inside the enclosure, install the 46" flex connector to the gas valve box and to the manual key valve.

This system is provided with switch mounted with the key valve. Wire it as shown in Figs. 23 and 24.

Use dielectric grease on all wire nut connections and ¼" connectors to prevent moisture issues from the outdoor environment.

The AWS system is polarity sensitive. There is a red sleeve attached to the positive (+) side of the adapter.

When wiring the switch, red wire from the AWS power wire connects directly to the switch. The red sleeve from the adapter connects to the other side of the switch. See Figs. 23 and 24 on page 15.

INSTALLATION OF MEDIA INTO BURNER PAN

Install lava rock into the burner pan. Ensure the lava rock is a minimum of 1-inch diameter for proper operation.
Note: Do not pour Lava Rock directly from bag. It should be placed naturally and NOT packed in tight. Loose fitting is important to ensure robust flames. Placing the lava rock in the pan by hand, ensures no excessive dust from bag lays in the bottom of pan and potentially plugs the burner port holes or the pan weep holes.

IMPORTANT: **DO NOT PLACE ROCK OVER TOP OR UNDER THE PILOT SCREEN COVER.** The screen must be free of any debris to ensure proper lighting of burner and good flame sense (See Fig. 22).

Cover the burner completely with media but do not make the depth greater than 1-inch over-top of the burner port holes.

Do NOT cover the top of mesh pilot hood with any rock or glass. It must be free an any debris to operate properly.

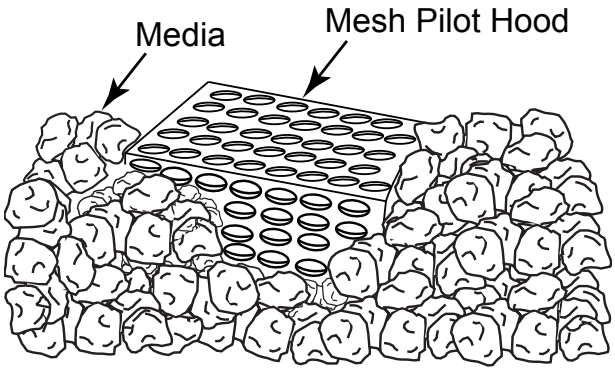

Fig. 22 Media placement around pilot hood.

WIRING DIAGRAMS FOR SINGLE INSTALL

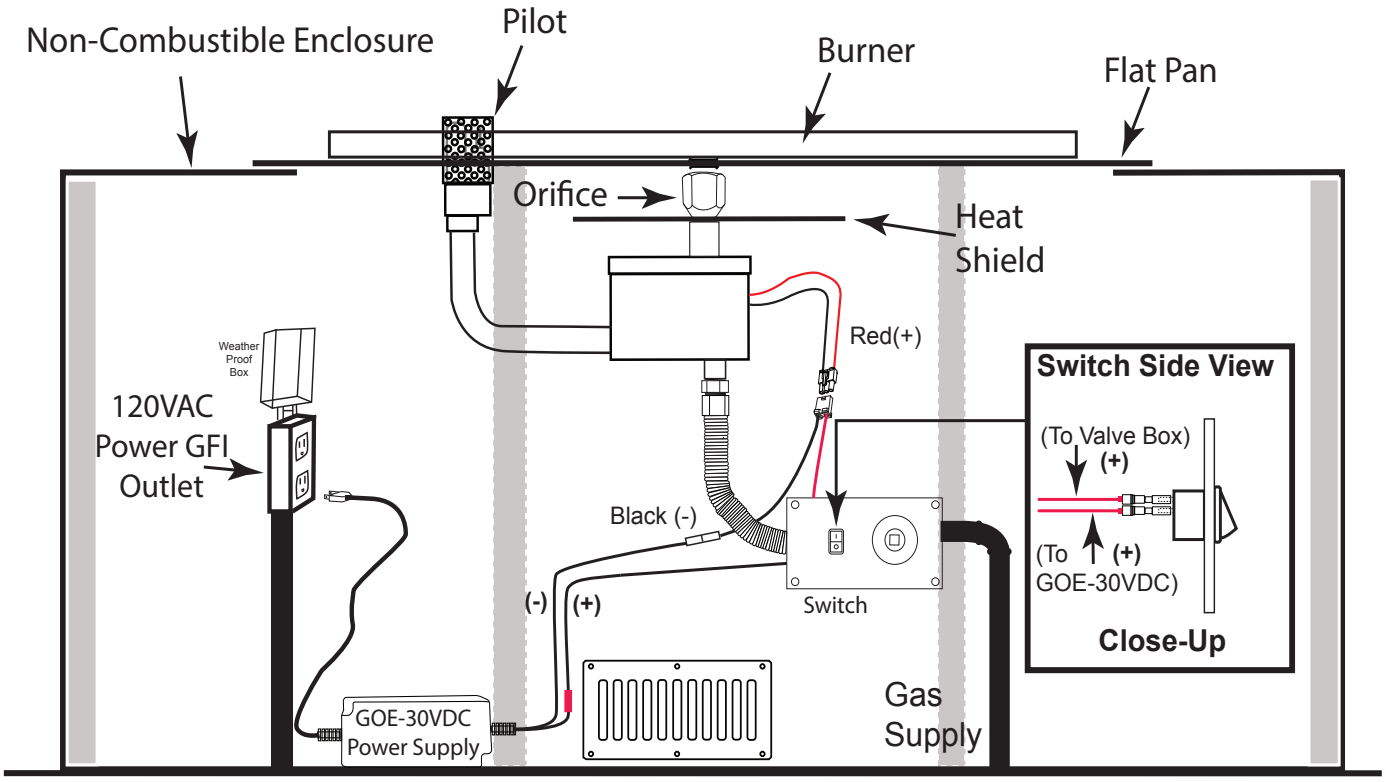

Fig. 24 Shows typical installation of fire pit using AWS system

WIRING DIAGRAM FOR OPTIONAL REMOTE CONTROL

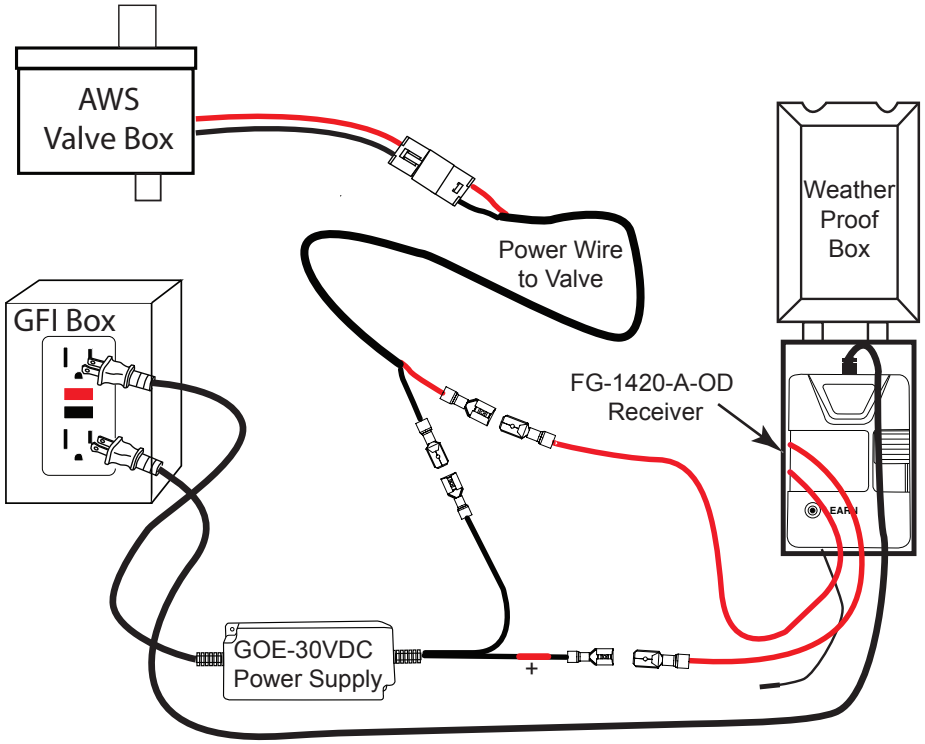

Fig. 23 Wire diagram of AWS system with optional1420-A remote control.

OPERATION & LIGHTING

CAUTION: Children and adults should be alerted to the hazards on high surface temperatures and should stay away to avoid burns or clothing ignition. Young children should be carefully supervised when they are in the area of the appliance.

WARNING: Do not use this appliance if any part has been under water. Immediately call a qualified service technician to inspect the appliance and to replace any part of control system and any gas control, which has been under water.

SAFETY WARNINGS

1. Never leave the fire pit unattended during operation.
2. Clothing or other flammable materials should not be placed on or near the appliance.
3. Any guard or other protective device removed for servicing the appliance must be replaced prior to operating the appliance.
4. Installation and repair should be done by a qualified service person. The appliance should be inspected before use and at least annually by a qualified service person. More frequent cleaning may be required as necessary. It is imperative the control compartment, burners and circulating air passageways of the appliance be kept clean.
5. Inspect the fuel supply connection before each use of the appliance.
6. Temporary storage of this appliance indoors is permissible only if it has been disconnected from its fuel supply (Natural or LP gas line).

WARNING

1. This appliance is hot when operated and can cause severe burns if contacted.
2. Do not burn any solid fuels in this appliance.

READ ALL LIGHTING INSTRUCTIONS BEFORE ATTEMPTING TO LIGHT FIRE PIT

CAUTION: **ENSURE YOU HAVE LEAK TESTED THE FIRE PIT BEFORE OPERATING.**

WARNING: Do not stand over fire pit during ignition or operation due to high surface temperatures.

LIGHTING INSTRUCTIONS

TURNING ON FIRE PIT/FEATURE

Prior to turning the fire pit ON, visually inspect the fire pit to ensure debris such as leaves or other combustible materials have not collected on top of the fire pit, which could burn and emit embers once the fire pit is turned ON. At the same time, ensure anyone standing close to the fire pit is aware you are turning it ON and steps away, at a safe distance prior to lighting.

The ignition sequence is as follows:

1. Turn the manual key valve to the ON position.
2. Turn the fire pit ON by pressing the button on the rocker switch. The hot surface igniter will heat up and begin to “glow” within 5-6 seconds.
3. Once the hot surface igniter heats up, the pilot gas valve opens, a “click” is heard, and gas is released to the burner, lighting the fire pit.

The entire ignition sequence ignites within 20 seconds or less. If not, press the OFF button on the remote control and wait 5 minutes before trying again.

TURNING OFF FIRE PIT/FEATURE

1. Turn the fire feature OFF by pressing the opposite button on the rocker switch.
2. If you are no longer burning the fire pit until another time, we recommend turning the key valve to OFF position.

AWS REPLACEMENT PARTS

1

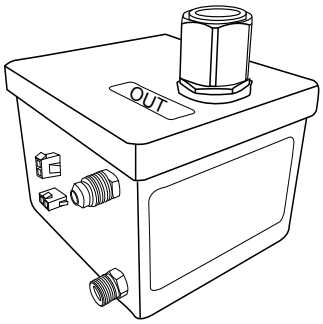

2

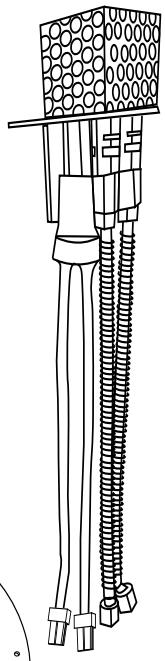

4

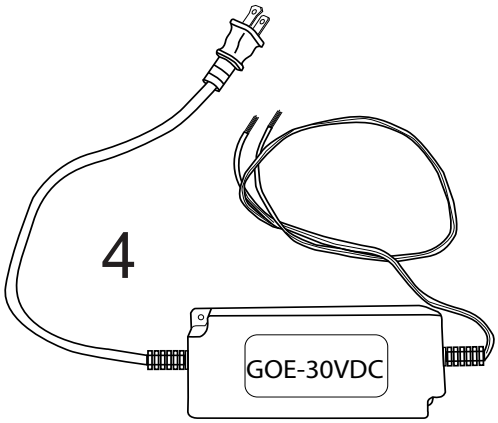

Items are not to scale

6

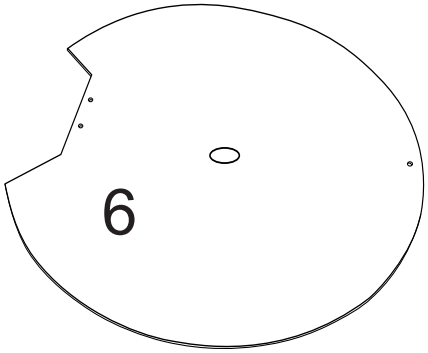

5

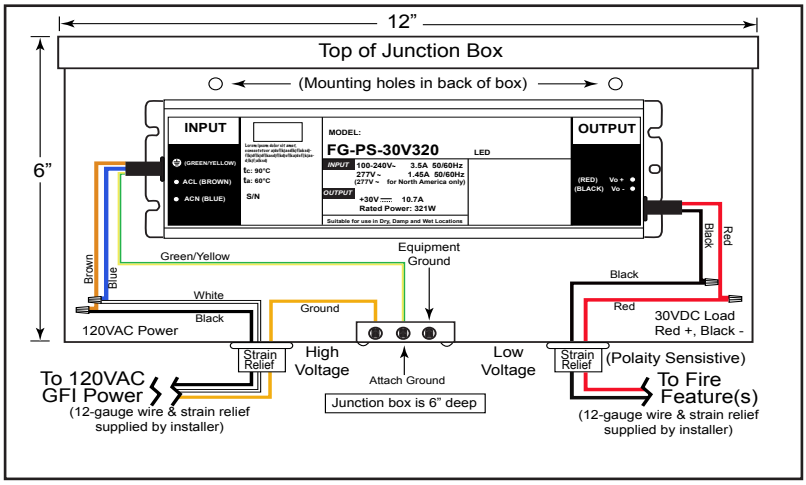

7

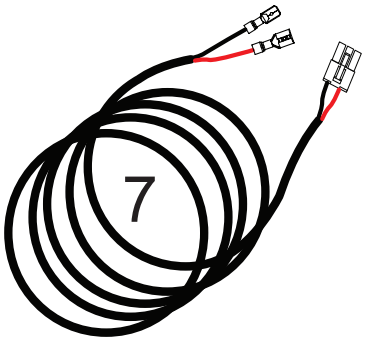

10

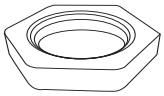

11

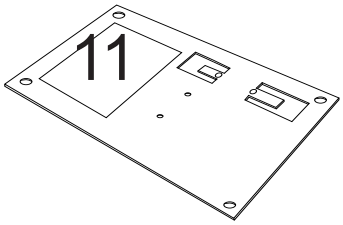

9

8

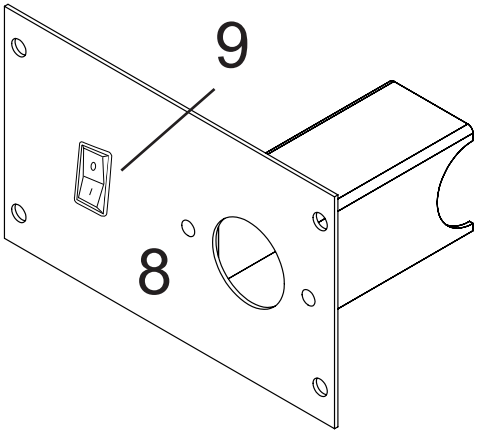

12

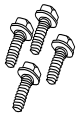

13

14

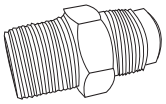

AWS REPLACEMENT PARTS LIST

Item	Description	Qty.	Part Number
1	Ignition Control Box (Valve box only)	1	FG-ICB
2	Pilot Burner Assembly (Complete pilot assembly and wires)	1	FG-PBA
3	LP Pilot Orifice (not shown)	1	FG-PBO-LP
4	30VDC Power Supply for single fire feature (10-feet from pools)	1	GOE-30VDC
5	30VDC Power Supply in NEMA approved box for multi fire feature installs; including pool/spa installations	1	FG-AWS-PS-30V320
6	Heat Shield	1	FG-HEATSHIELD
7	AWS Power Wire to Valve	1	10626
8	Key Valve Faceplate and Switch	1	78130
9	Weatherproof Rocker Switch	1	WP-SWITCH
10	½" NPS Bass Nut (secures heat shield)	1	105-8
11	Pilot Assembly Mounting Plate	1	PLATE-AWS
12	10-24 x ¾" SS Thread Cutting Screw (not shown)	4	10409
13	8-18 x ½" Hex Head Self Tapping Stainless Screw (not shown)	2	31802
14	½" Flare x to ½" MIP	1	U1-8D-S

Valve Box Reference

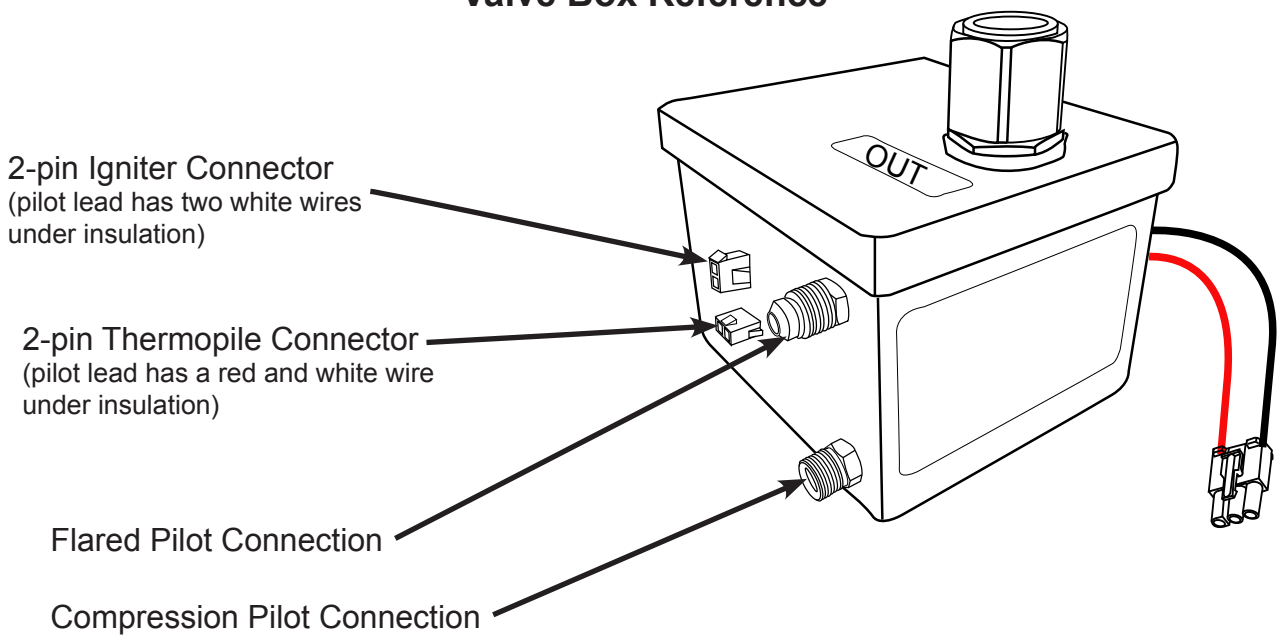

Sequence of Operation

Fire Feature Turned ON

↓

First Pilot with Hot Surface Igniter Heats Up and Glows (5-6 seconds)

↓

Secondary Pilot Opens; "Click" is Heard; Gas is Released to Burner

↓

Fire Feature is Lit Until Turned OFF

The system is designed to relight itself if blown out. It will try (3) times to relight before it goes into a "hard" lock out. Then it must be turned OFF and back ON to reset it .

START UP ISSUES

1. Turned the Fire Feature ON... but nothing happens.

- **No Power** - Check for power at the fire feature(s). Confirm proper power is being supplied to the system. 30VDC from power supply to valve and 120VAC volts where power supply is plugged into.
- **Defective Controller** - If for some reason someone connected 120VAC power directly to the gas valve, the controller inside the valve box will be damaged. It this happens, a burned electrical smell might be present.

2. Glow Plug does not glow.

- **Connector Not Plugged In Correctly** - Check the 2-Pin connector from pilot to the gas valve, Ensure it is plugged into place with the locking latch.
- **Pins Not Secure** - Check the pins inside the 2-pin connector, ensure they are not loose. If loose push them back in until tight and try system again.
- **Possible Defective Igniter** - Unplug the igniter and check resistance across the two pins inside the plastic housing coming from the pilot assembly. Use a multi-meter to check resistance. No resistance or resistance greater than 8 ohms indicates a defective igniter. Page 27 valve reference shows the igniter and thermopile 2-pin connections for testing.

3. Glow Plug Glows, But Does Not Ignite the Gas

- **Insufficient Power** - If the glow plug is not getting enough power, it will not get ignite the gas.
- **Thin Wire** - The recommended minimum wire gauge is 12AWG . If wire is less than 12-gauge there may not be enough power to get the igniter hot enough.
- **No Gas** - Was the gas line purged of air. If gas line was not bled it may take a while before the gas gets to the fire feature.
- **Manual Shut Off Valve** - Is the manual shut-off or key valve open?
- **Debris** - Debris can get trapped inside the screen of the gas valve. Excessive amounts of pipe dope or Teflon tape and restrict gas flow.
- **Debris in Pilot Burner** - New gas lines, until bled, have air and will have some debris. Ensure gas it turned OFF and electrical is unplugged. Remove the two brass fitting from the gas valve, then use “canned air” to blow through the pilot outlets.
- **Wrong Pilot Orifice** - If the wrong pilot orifice is installed into the primary pilot it will not light.
- **Oxygen Starvation** - To ignite gas we need oxygen, fuel and a heat source. If the pilot assembly is buried underneath the glass media or lava rock it will not allow the pilot to light.
- **Weak Igniter** - In some cases, from the manufacturer’s glow plug will have slight difference in assembly which can cause some igniter’s burn hotter than others. These are tested before they are sent to customers but sometimes a weak one can get out. If this occurs, the symptom will always be the same - inconsistent or no ignition at all. In this case, replace the pilot burner.

4. Pilot Lights, But No Flame to the Main Burner

- **Valve Box Installed Backwards -** Check the label on the gas valve box and ensure the burner is connected to the OUTLET side of the gas valve box.
- **Thermopile Pins Not Secure** - Check the pins in the pilot burner connector, remove it from the gas valve and check for loose pins. If loose, push inward until tight and try again. If this happens, the glow plug will stay ON for up to 30 seconds before turning OFF. It normally shuts off in about 5 seconds.
- **Defective Thermopile** - Thermopile’s rarely go bad however if a product is used consistently for extended periods of time a thermopile can get too hot (like a blow torch) and eventually cause it to swell. Simply loosen the thermopile from the pilot assembly and slide it out. If it will not slide out because is it too tight, then it will need to be replaced.
- **Debris** - Debris can get trapped inside the screen of the gas valve. Over time rust and other debris can restrict the gas flow on the Outlet screen of the valve that can partially or sometimes even stop the flow. Inspect the screen, remove it and clean it then replace it.
- **Defective Controller or Main Gas Valve** - If you have inspected the thermopile connections and no debris is on the controller or gas valve; checked the power, then the gas valve or controller may be defective and will need replaced.

5. Fire Features Lights... Turns OFF Within A Few Seconds... and Restarts Again (Keeps repeating this sequence)

- **Gas Volume Insufficient -** When initially turning ON the fire feature pilot is lit and there is enough gas for the pilot to light, however once main gas valve is turned ON, the flow of gas to pilot drops not providing enough gas to keep the thermopile hot enough therefore the pilot will drop out and relight. This is usually caused by insufficient Gas Volume and can be caused by installing gas pipe too small to deliver proper amount of gas or by installing a Manual Gas Shutoff (Ball valve or Key Valve) with a capacity that is too small to allow enough gas to pass through to the feature.
- **Main Burner Orifice Not Installed** - Ensure the correct orifice is being used. If using LP gas it should have vent holes, Natural gas does not. See Fig. 3, page 8. The orifice/air mixer restricts the amount of gas flowing to the Main Burner. This restriction ensures that not ALL the gas will flow to the Main Burner, so there is still enough gas left for Pilot Burner.
- **Oxygen Starvation** - to ignite gas we need oxygen, fuel and a heat source. If the pilot assembly is buried underneath the glass media or lava rock it will not allow the pilot to light.
- **Defective Thermopile** - See Symptom 4, page 29 for Defective Thermopile.
- **Defective Controller** – If your plumbing is supplying enough gas, the Main Burner orifice is installed, the Pilot Burner is getting plenty of air and the Thermopile is not defective the only thing left is a Defective Controller inside the valve box. If you have a Defective Controller the only way to fix it is to replace it.

6. Fire Feature Cycles (Turns On and Off) Every Few Minutes

- **Gas Volume Insufficient** – See symptom 5 page 17 for “Gas Volume Insufficient” for detailed explanation.
- **Oxygen Starvation (Pilot Burner)** – See symptom 5 page 17 for “Oxygen Starvation” for detailed explanation.
- **Defective Thermopile** – See symptom 4 page 17 for “Defective Thermopile” for detailed explanation
- **Defective Controller** – See symptom 5 page 17 for “Defective Controller” for detailed explanation

7. Main Burner Flame Lazy/Small or Flame NOT Spread Out Over Entire Burner

- **Gas Volume Insufficient** – See symptom 5, page 17 for “Gas Volume Insufficient” for detailed explanation
- **Debris On Inlet Screen; Valve Box** – See symptom 3, symptom 4, page 17 for “Debris on inlet screen for detailed explanation
- **Debris On Outlet Screen; Valve Box** – See symptom 4, page 17 for “Debris on Outlet Screen for detailed explanation.
- **Obstruction In Plumbing Between Gas Valve Outlet and Main Burner** – If your plumbing was sized correctly to deliver the proper amount of gas and the screens in the valve box are clean, inspect the plumbing between the valve and the burner for obstructions. Also, inspect inside the burner inlet to ensure no obstructions in there as well.

8. Main Burner Flame “Flares Up” Every Few Minutes

- **Fire glass/Media Layer too Thick** – Fire glass/media comes in different sizes. Use only ½” - ¾” diameter. If you put a thick layer of fire glass/media on top the burner, over 1” in depth; there is a good chance some of the gas will get “trapped” within the media while the feature is ON. When this happens, the trapped gas in the fire feature ignites and you see the “*Flare Up*” effect. Remove some of the fire glass/media from the burner to see if this fixes the problem.
- **Gas Leak** – Natural Gas is lighter than air therefore when released into the atmosphere it rises. If you have a Natural Gas fire feature and there is a gas leak the Natural Gas will rise to the top of the feature. Once it encounters the flame a flare up will occur. Propane is heavier than air so if there is a gas leak when using propane the gas will fall into the bottom of the feature. That is why it is REQUIRED drainage/ventilation be installed at the bottom of the feature when using Propane. You do NOT want Propane accumulating inside the fire feature.

SHUTDOWN ISSUES

9. Turn the Feature OFF…but a Small Flame Continues to Burn in the Pilot Burner

- **Leak in the Pilot Burner Gas Valve** – When debris enters the gas valve by way of either the Inlet or outlet there is a chance some of that debris will enter the Pilot Burner Gas Valve and contaminate the seal inside the valve. If this occurs, the possibility exists the valve will not seal properly when turned **OFF** thereby allowing a small amount of gas to flow even after turned OFF. Often this will result in a small flame that continues to burn in the Pilot Burner after the feature has been turned OFF.

10. Turn the Feature OFF…But Small Flames Continue to Burn Out the Main Burner

- **Leak in the Main Burner Gas Valve** - when debris enters the gas valve by way of either the Inlet or Outlet there is a chance some of that debris will enter the Main Burner Gas Valve and contaminate the seal inside the valve. If this occurs the possibility exists the valve will not seal properly when turned off thereby allowing a small amount of gas to flow even after turned off. Often this will result in a small flame that continues to burn on the Main Burner after the feature has been turned OFF.

OPTIONAL ACCESSORIES

The following accessories are available from your local Firegear Outdoors dealer/distributor.
Each accessory comes with a separate installation manual. Read each instruction thoroughly before installing.

Shut-Off Valves **Model:** 01-387 ⅜" OD Flare x ½" FIP **Model:** 01-487 ½" OD Flare x ½" FIP **Model:** 01-266 ⅜" OD Flare x ⅜" OD Flare **Model:** 01-288 ½" OD Flare x ½" OD Flare	*Vent Kits* **Model**: VENT-KIT-6X12SS (provides 18 sq. in of ventilation per side of enclosure) **Model**: PAVER-VENT-4LNTS **Model:** PAVER-VENT-6LNTS	*Glass Windshields* See catalog for a windshield to fit your application.
Vent Kits **Model**: PAVER-VENT-4LNTS **Model:** PAVER-VENT-6LNTS (provides 18 sq. in of ventilation per side of enclosure when using pavers or SRW walls)	*Log Sets* **Model:** L-SF (Spit Fire) - 17pc (52lbs) Ironwood Steel Logs (see catalog) L-Sedona (Sedona) 19pc (200lbs) **Note:** When installing log sets on fire features additional support of the burner pan may be necessary.	*FlexFrame* **Model:** FLEXFRAME-SS (2pc.) FLEXFRAME-SS3 (3pc.) FLEXFRAME-PRO-3 Universal brackets to support fire pit when using paver blocks or other non-combustible enclosures.

Emergency Stop (Emergency shut-off valve) **Model:** FG-EMER-STOP (includes J-Box and weatherproof cover) 	*ON-OFF Switches* **Model:** FG-WS-OD (On-Off Wall Switch; includes J-Box and weather-proof cover) **Model:** FG-1420-AOD (Remote Control; includes J-Box and weather-proof cover) 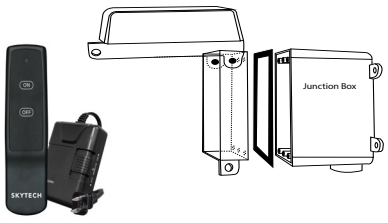	*Timer* (*Me*chanical gas timer) **Model:** FG-TIMER- 2HR * Includes weatherproof J-box and cover

NOTE: See Firegear Outdoors catalogue for a additional accessories not shown above.

FIRE PIT MAINTENANCE

1. The fire pit should be inspected and cleaned before initial use at least annually by a qualified field service person.
2. Any component that is found faulty must be replaced with an approved component.
3. Any tampering or modifying with the fire pit is dangerous and voids all warranties.
4. During winter months in cold climates and various seasons operation the fire pit may be affected by weather conditions. It is recommended to use a ventilated cover over top of your fire pit to protect it from humid/rainy weather conditions when not in use. Heavy rains/downpours could affect the fire pit operation if not covered; if this occurs ensure you allow the fire pit time to dry out before attempting to operate. **NOTE**: If a combustible type cover is used over the fire pit when not in use be sure to remove it before operation to prevent a severe safety hazard.

Firegear Outdoors hereby warrants to the end user that products will be free from material and workmanship defects that prevent safe and correct operation of the product. The warranty commences from date of sale to the end user for the following period:

ALL WARRANTIES WITHIN THIS DOCUMENT ONLY APPLY TO PRODUCTS MANUFACTURED AFTER | 01 / 01 / 2026

BURNER SYSTEMS I BURNERS I COMPONENTS I ACCESSORIES TYPE OF PRODUCT	CONSUMER APPLICATIONS	COMMERCIAL APPLICATIONS
Construction and Manufacturer Defects	Lifetime Warranty	2 Year Warranty
Stainless Steel Burners and Pans	Lifetime Warranty	2 Year Warranty
Pro Series Burners	Lifetime Warranty	2 Year Warranty
Gas Valve, Spark Igniter, and Pilot Assemblies	5 Year Warranty	2 Year Warranty
AWS Electronic Ignition Systems (12 VAC, 24 VAC, 30 VAC)	3 Year Warranty	1 Year Warranty
TPSI Electronic Components	5 Year Warranty	2 Year Warranty
MT Components (Key Valve)	5 Year Warranty	2 Year Warranty
Refractory Gas Log Sets	5 Year Warranty	2 Year Warranty
Skytech Manufactured Optional Controls	2 Year Warranty	1 Year Warranty

OUTDOOR FIREPLACE I KALEA BAY TYPE OF PRODUCT	CONSUMER APPLICATIONS	COMMERCIAL APPLICATIONS
Construction and Manufacturer Defects	Lifetime Warranty	Lifetime Warranty
Stainless Steel Components	Lifetime Warranty	Lifetime Warranty
Gas Valve, pilot Assembly, Power Supply, and Controls	5 Year Warranty	2 Year Warranty
Skytech Manufactured Optional Controls	5 Year Warranty	2 Year Warranty

SANCTUARY SERES - GFRC FIRE FEATURES TYPE OF PRODUCT	CONSUMER APPLICATIONS	COMMERCIAL APPLICATIONS
GFRC Structure	* 3 Year Warranty	* 3 Year Warranty
* The warranty covers manufacturing defects or structural failure. Small stress cracks and surface crazing are a natural occurrence in GFRC products and are not covered within this warranty. Discoloration over time is a natural process and is not covered by this warranty		
Burner System	** Refer to Burner System	** Refer to Burner System
** Please refer to your burner system warranty for more information about your warranty.		

ACCESSORIES TYPE OF PRODUCT	CONSUMER APPLICATIONS	COMMERCIAL APPLICATIONS
Construction and Manufacturer Defects	Lifetime Warranty	Lifetime Warranty
Stainless Steel Components (Lids, Stainless Steel Covers)	Lifetime Warranty	Lifetime Warranty
ESTOP1-0H, Windshields, Hoses & Regulators	1 Year Warranty	1 Year Warranty

For additional details, please refer to the products installation manual

The end-user must provide a bill of sale, canceled check, or payment record to verify the purchase date and to establish the warranty period. This Limited Warranty shall be valid and limited to the original purchaser only.

WARNING: Any modification to the product will void the warranty.

This Limited Warranty shall be limited to the repair and/or replacement of parts that have been proven to be defective under normal use and service. All warranty claims must be made by the Distributor/Dealer account on behalf of the end-user. You may contact Technical Support at 800-966-8126.

Our Technical Service Department must confirm all approved defects. If a defect is confirmed and we approve the claim, we will replace such parts without charge. This warranty gives you specific legal rights, and you may also have other rights, which vary from state to state.

The manufacturer may request defective products returned with an RMA (Return Merchandise Authorization) issued by Firegear Outdoors for specific products, which is considered to be the nature of the defect and or warranty claim. Product to be returned should; be packed so as not to incur damages during transportation. Firegear Outdoors is not responsible for damages on returned items. RMA is valid for thirty (30) days from the date issued. The RMA must be clearly marked on the outside of the package.

Please check with your local building code department or governing agency for proper approvals before purchasing. Firegear Outdoors is not responsible for any violation of local codes.

Travel, diagnostic cost, service labor to repair the defect on warranty parts to and from the factory will be the responsibility of the owner. We will not be responsible for labor charges and/or damage incurred in installation, repair, and replacement. Firegear Outdoors is not responsible for Issues related to gas or electrical installation.

The Limited Warranty is voided if not assembled, installed, and operated as intended. This Limited Warranty does not cover any defects due to accident, abuse, misuse, alteration, misapplication, vandalism, improper installation or improper maintenance or service, removal from the original location, or re-installation into another location, or failure to perform normal and routine maintenance.

Damage due to severe weather conditions such as hail, hurricanes, earthquakes, tornadoes, discoloration due to overheating, exposure to chemicals (including chlorine and salt), either directly or in the atmosphere, or very high humidity, is not covered by this Limited Warranty. Coastal, humid and/or salt environments are subject to manufacturer review. All out-of-box claims must be made within 30 days of purchase and must be made prior to installation. Any product installed damaged will be considered damaged during installation and not covered under warranty.

There are no other express warranties except as set forth herein. For consumer applications, any applicable implied warranties of merchantability and fitness are limited in duration to the period of coverage of this Limited Warranty. Some states do not allow limitation on how long an implied warranty lasts, so this limitation may not apply to you.

For Commercial Applications, the liability of Firegear Outdoors is limited to the express terms of this warranty. We expressly disclaim any and all implied warranties, including any warranties of fitness for a particular purpose or merchantability.

We are not liable for any special, indirect or consequential damages. Our maximum liability is limited to the purchase price of the purchased units. Some states do not allow the exclusion or limitation of incidental or consequential damages, so this limitation or exclusion may not apply to you.

We do not authorize any person or company to assume for it any other obligation or liability in connection with the sale, installation, use, removal, return, or replacement of its equipment, and or such representation are binding.

FOR TECHNICAL SERVICE, CALL:

Firegear Outdoors, an Earthcore Industries Brand
1600 Riverfork Drive
Huntington, IN 46750
260-388-5653
techsupport@firegearoutdoors.com

Manual changes often occur, ensure to check the Firegear website for any recent updates and warranty information.

Having problems getting the fire pit to operate? Don't leave the job site! We want to help! Call 260-355-5577 for Technical Support between the hours of 8:30AM to 4:30PM

BEFORE YOU CALL WE WILL NEED THIS INFORMATION

1. Model Number: _____
2. Serial Number: _____
3. How long is the gas line run? Nat Gas ____ LP Gas ____
4. What size is gas line? _____
5. Inlet Gas Pressure: _____WC
   Manifold Gas Pressure: _____ WC
6. What type of media are you using? _____
7. Review the troubleshooting section in the installation manual.
8. What are the symptoms? Please be prepared to explain.
9. Be prepared to send photos to us when on the phone.
10. Found missing or damaged parts? Let us know ASAP or send photos.