FIREGEAR® by earthcore®

DO NOT DISCARD. THIS MANUAL HAS IMPORTANT OPERATING AND MAINTENANCE INSTRUCTIONS. LEAVE WITH THE HOMEOWNER.

MODEL:

SERIAL #:

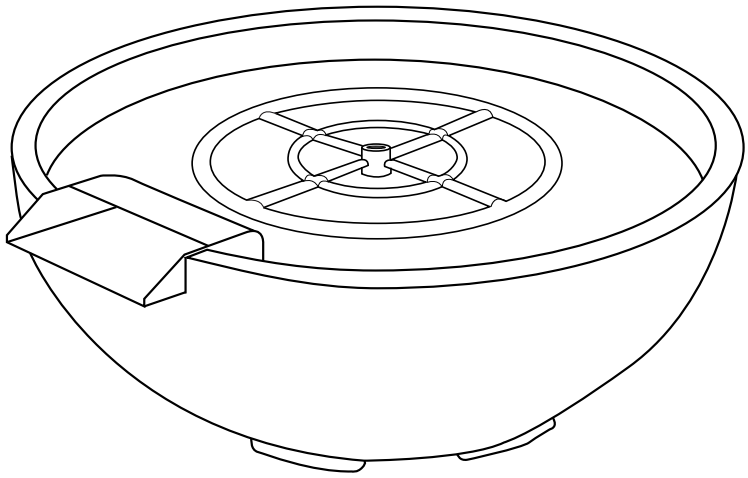

MODELS

Natural Gas	Description
TF-GFRC-FBWGR-30W	29½" x 12 ½" Grey Concrete Bowl
TF-GFRC-FBWSN-30W	29½" x 12 ½" Sand Concrete Bowl
TF-GFRC-FBWBR-30W	29½" x 12 ½" Brown Concrete Bowl

Adobe Fire & Water Bowl
Installation and Operating Instructions

All Fire Bowls have ventilation designed into each bowl.

IF YOU CANNOT READ OR UNDERSTAND THESE INSTALLATION INSTRUCTIONS DO NOT ATTEMPT TO INSTALL OR OPERATE THIS APPLIANCE

These fire pit burners are manufactured from the factory for Natural gas only. If you intend using LP gas then you must purchase a LP conversion kit. See Table of Contents for LP converstion kit information.

Warning: For Outdoor Use Only

NATIONAL FIREPLACE INSTITUTE NFI CERTIFIED www.nficertified.org

We recommend that our gas hearth products be installed and serviced by professionals who are certified in the U.S. by the National Fireplace Institute® (NFI) as NFI Gas Specialists.

DANGER

CARBON MONOXIDE HAZARD

This appliance can produce carbon monoxide which has no odor.

Using it in an enclosed area can kill you.

Never use this appliance in an enclosed space such as a camper, tent, car or home.

DANGER

FIRE OR EXPLOSION HAZARD

If you smell gas:

1. Shut off gas to the appliance.
2. Extinguish any open flame.
3. If odor continues, leave the area immediately.
4. After leaving the area, call your gas supplier or fire department.

WARNING

Do not leave unattended during use.
Do not use for cooking.
Follow all gas leak procedures in this manual prior to operation.

WARNING

If the information in this manual is not followed exactly, a fire or explosion may result causing property damage, personal injury, or **loss of life**.

FOR YOUR SAFETY

Do not store or use gasoline or other flammable vapors and liquids in the vicinity of this or other appliances.

WARNING

Do not store or use gasoline or other flammable vapors and liquids in the vicinity of this or any other appliance.

An LP cylinder not connected for use shall not be stored in the vicinity of this or any other appliance.

WARNING

Improper installation, adjustment, alteration, service or maintenance can cause injury or property damage, personal injury or loss of life
Read the owner's information manual provided with this appliance.
Installation and service must be performed by a qualified installer, service agency, or the gas supplier.

Fuels used in gas fired appliances, and the products of combustion such as fuels, contain chemicals known to cause cancer, birth defects and/or other reproductive harm.
This warning is issued pursuant to the California Health & Safety Code Sec. 25249.1

CALIFORNIA PROPOSITION 65

⚠ WARNING

This product is designed to operate with one of the following fuel sources: Liquid Propane or Natural Gas. The fuel used to operate this product, and the products of combustion of such fuel, can expose you to chemicals including Benzene which is known to the State of California to cause cancer, birth defects and other reproductive harm and Carbon Monoxide which is known to the State of California to cause birth defects or other reproductive harm.

(For more information go to: www.p65Warnings.ca.gov.)

TABLE OF CONTENTS

Specifications	4
Preparing a Location for Your Fire Bowl	5
Hard Piping to Fire Bowl	5
High Elevation	5
Gas Pipe Sizing Chart	6
Pre Installation Checklist	7
Installation Requirements of Fire Bowl	8
Fire & Water Bowl Requirements	9
Installation of Lava Rock/Media	10
Fire Bowl Operation	11
Lighting Instructions	11
Replacement Parts	12
Replacement Parts List	12
Maintenance	13
LP Conversion	14
Trouble Shooting	15
Optional Accessories	16
Warranty	17-20

All media (i.e. lava rock, lava stones, lava boulders and fire glass) has the potential of thermal spalling. This is a process that may occur when media is wet and moisture gets trapped inside of the material due to rapid temperature differences. When this happens the media has the potential to crack or “pop” outside the fireplace.

WE HIGHLY RECOMMEND COVERING ALL FIRE FEATURES WHEN NOT IN USE

The use of a cover can lessen the impact of thermal spalling; however, heavy rains, high humidity and the presence of moisture may still cause the media to pop.

ALWAYS USE CAUTION WHEN USING THE FIRE FEATURE

Extra caution should be taken when lighting a fire feature after heavy rains, high humidity and moisture are present. Light the fire feature; leave the area allowing any moisture in the media to dissipate. We strongly recommend that during this drying out time that you monitor the fire feature from a distance. This drying out period should be no less than 30 minutes. Continue monitoring the flame from distance to ensure that all popping has ceased before fully enjoying the fire.

FIRE BOWL SPECIFICATIONS

Model: Natural Gas (NG)	A Overall Width	B Inside Width	C Inside Depth	D Height	E Side Wall	F Combustible Ceiling	G* Combustible Floor	Ring Burner Size
TF-GFRC-FBWGR-30W	29½" (749mm)	27" (686mm)	2" (51mm)	12 1/2" (318mm)	36" (914mm)	96" (2438mm)	N/A	12"
TF-GFRC-FBWSN-30W	29½" (749mm)	27" (686mm)	2" (51mm)	12 1/2" (318mm)	36" (914mm)	96" (2438mm)	N/A	12"
TF-GFRC-FBWBR-30W	29½" (749mm)	27" (686mm)	2" (51mm)	12 1/2" (318mm)	36" (914mm)	96" (2438mm)	N/A	12"

Table 1 Fire Bowl Specifications (* Bowl must be on a non-combustible surface)

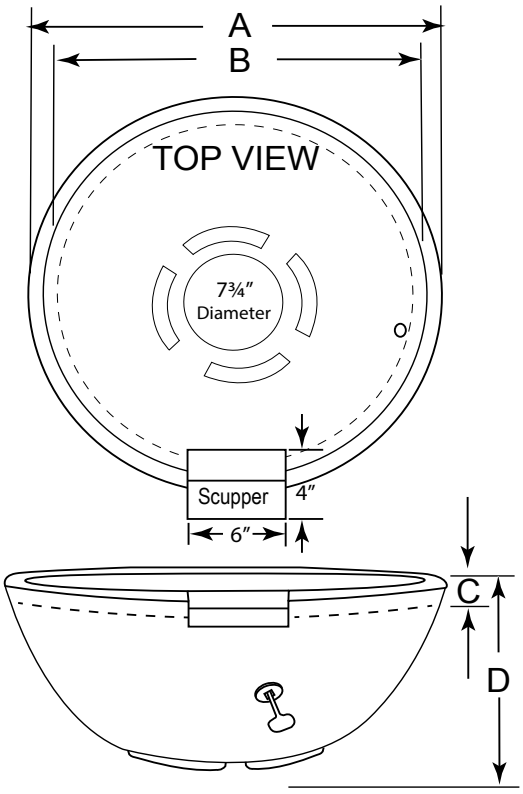

Fig. 1 Fire Bowl Dimensions

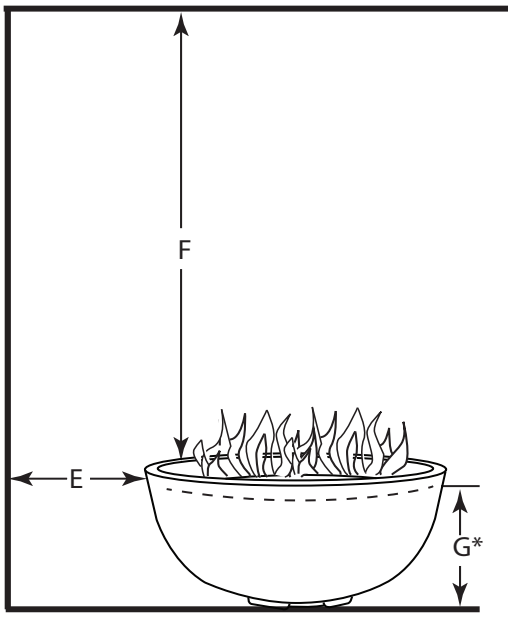

Fig 2. Clearance to Combustibles
(Not to be used in an enclosed space)

Model:	***NG Orifice***	***LP Orifice***	***Btu's***
TF-GFRC-FBWGR-30W	#18 (4.3mm)	#36 (2.7mm)	100,000 (29.30kW)
TF-GFRC-FBWSN-30W	#18 (4.3mm)	#36 (2.7mm)	100,000 (29.30kW)
TF-GFRC-FBWBR-30W	#18 (4.3mm)	#36 (2.7mm)	100,000 (29.30kW)

Table 2 Btu Specifications

Disclaimer: Btu listings are based on 7.0"WC for Natural Gas and 11.0"WC for Liquid Propane (LP) to the gas valve. Flex line size and proper gas pipe sizing will also affect Btu's. As a result your Btu's may vary slightly from Table 2 specifications.

Pressure	**NG**	**LP**
Min. Inlet	3.5" WC (0.87kPa)	8.0" WC (1.99kPa)
Max. Inlet	10.5" WC (3.48kPa)	14.0" WC (3.48kPa)
Normal Inlet	7.0" WC (1.74kPa)	11.0" WC (2.73kPa)

Table 3 Gas Pressures

WARNING: Proper clearances from combustible materials must be maintained from all sides, top and bottom of this bowl. Use the specifications listed for proper clearance to combustibles.

PREPARING A LOCATION FOR FIRE FEATURE

NOTE: The Firegear Outdoor Fire bowls are constructed of Glass Fiber Reinforced Concrete (GFRC). The bowl weighs 83 LBS without media or the burner system installed. Ensure the structure you are placing these fire features on is solid enough to securely hold the weight. IT IS HIGHLY RECOMMENDED FOR AT LEAST 2-3 PEOPLE TO ASSIST IN MOVING THE FIRE FEATURE INTO PLACE.

Install the fire bowl on any level, flat, stable, **non-combustible surface.** **NOTE**: Do not place bowl directly on grass, dirt, or rocks as this may prevent proper ventilation. Water drainage is designed into all Fire Bowl models. **Ensure not to block/plug the drain areas to prevent potential damage to your fire bowl.**

The Fire Bowl can be plumbed with either Natural or Propane (LP) gas. See Fig. 3. If you choose to run hard pipe to any Fire Bowl model, enter through center (bottom) of the bowl; protrude pipe no higher than 4" above ground level.

HARD PIPING TO FIRE FEATURE WITHOUT GAS PROXIMITY

NOTE: Refer to the NFPA54 (National Fuel Gas Code) for proper pipe sizing. See gas line sizing chart on page 6 of this manual as a reference.

1. Turn **OFF** gas supply system. **NOTE**: All gas connections (except for brass to brass) require the following. Clean pipe threads using either a wire brush or steel wool. Apply pipe sealant to the fittings before making any connection.
2. **BE CAREFUL!** Ensure all gas connections are snug, but do not over tighten!
3. Consult a plumber for proper installation to ensure you are providing adequate gas supply for your application.
4. The primary gas shut-off (not supplied), will require a ⅜" male flared fitting to enable connection of the stainless steel flex gas line supplied with the fire feature.

FLEXIBLE PIPING TO FIRE FEATURE

1. Do not place an LP tank inside any fire feature enclosure. Locate all propane (LP) tanks away from the fire feature in an approved separate enclosure. Maintain a minimum of 60" from the Sanctuary Series. Flex line can run through any vent holes. If using Propane gas an FG-LPRK regulator **(not included)**, must be used and a FG-12QDK quick disconnect kit (not supplied) enables the use of a Propane (LP) gas tank connection. See Fig. 3.

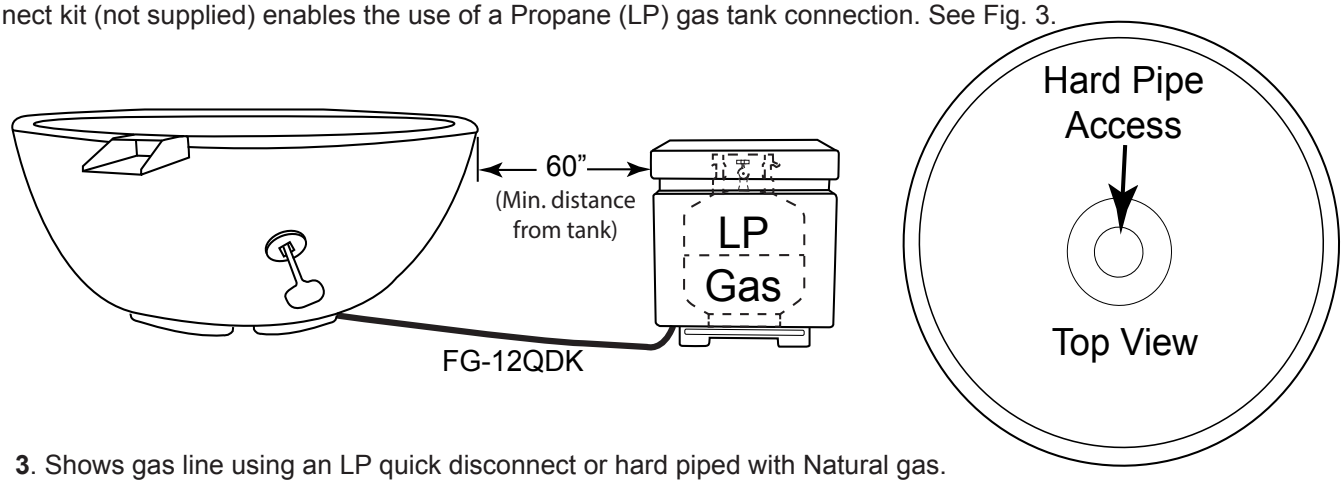

Fig 3. Shows gas line using an LP quick disconnect or hard piped with Natural gas.

HIGH ELEVATION INSTALLATION

This appliance is listed for elevations from 0-4500 feet in Canada and the U.S. If elevation exceeds 4500 feet it may be necessary to decrease the input rating by changing the existing burner orifice to a smaller size. Input should be reduced 4% for each 1000 feet beyond the 4500 feet above sea level. Check with your local gas utility for assistance in determining the proper orifice in your location. In some cases the heating value may already be reduced and downsizing the orifice may not be necessary. Refer to NFPA 54 Table E.1.1(d) for high altitude orifice sizing.

GAS PIPE SIZING CHART

NATURAL GAS : PIPE SIZING CHART

Length of Pipe in Feet	1/2"	3/4"	1"	1 - 1/4"	1 - 1/2"	2"	2 - 2 1/2"	3"	4"
10	108	230	387	793	1237	2259	3640	6434	-
20	75	160	280	569	877	1610	2613	5236	9521
30	61	129	224	471	719	1335	2165	4107	7859
40	52	110	196	401	635	1143	1867	3258	6795
50	46	98	177	364	560	1041	1680	2936	6142
60	42	89	159	336	513	957	1559	2684	5647
70	38	82	149	317	476	896	1447	2492	5250
80	36	76	140	239	443	840	1353	2315	4900
90	33	71	133	275	420	793	1288	2203	4667
100	32	68	126	266	411	775	1246	2128	4518
125	28	60	117	243	369	700	1143	1904	4065
150	25	54	105	215	327	625	1008	1689	3645
175	23	50	93	196	303	583	993	1554	3370
200	22	47	84	182	280	541	877	1437	3160
300	17	37	70	145	224	439	686	1139	2539

- Natural Gas (NG) flow is given in thousands of BTU/hr. = 1 cubic foot of NG gas - 1000 BTU
- Nominal pressure at the burner for Natural Gas is 3.5" of water column. (Typical machine supply 5"-7")
- Pipe length must include additional length for all fittings. Add approximately 5 feet of pipe per fitting.
- Natural Gas Example: A machine with a burner that requires 440,000 BTU would need a 1 -1/4" pipe for a 20" long run.

LIQUID PROPANE : PIPE SIZING CHART

Length of Pipe in Feet	1/2"	3/4"	1"	1 - 1/4"	1 - 1/2"	2"	2 - 2 1/2"	3"	4"
10	275	567	1071	2205	3307	6221	10140	17990	35710
20	189	393	732	1496	2299	4331	7046	12510	25520
30	152	315	590	1212	1858	3465	5695	10110	20620
40	129	267	504	1039	1559	2992	4778	8481	17300
50	114	237	448	913	1417	2646	4343	7708	15730
60	103	217	409	834	1275	2394	3908	6936	14150
70	89	185	346	724	1086	2047	3329	5908	12050
80	78	162	307	630	976	1811	2991	5309	10830
90	69	146	275	567	866	1606	2654	4711	9613
100	63	132	252	511	787	1496	2412	4281	8736
125	54	112	209	439	665	1282	2083	3618	7382
150	48	100	185	390	590	1138	1808	3210	6549
175	43	90	168	353	534	1030	1637	2905	5927
200	40	83	155	325	491	947	1505	2671	5450
300	37	77	144	303	458	887	1404	2492	5084

- Liquid Propane (LP) Gas flow is given in thousands of BTU/hr. = 1 cubic foot of LP gas - 2500 BTU.
- This chart refers to low pressure LP, after regulation, Standard nominal pressure at the burner for Liquid Propane Gas is 11" of water column.
- Pipe length must include additional length for all fittings. Add approximately 5 feet of pipe per fitting.
- LP Example: A machine with a burner that requires 440,000 BTU would need a 1" pipe for a 20' long run.

NOTE: The sizing charts above list the specific pipe sizes required for the amount of BTU's for a new gas line installations. If you are using an existing gas line you must take into consideration the existing gas line capacities to ensure you will have proper pressure. This chart is for reference only, we recommend you consult with a Licensed Plumber/Gas Fitter or NFPA54 (National Fuel Gas Code - current edition) for more details.

Table 4 Gas Pipe Sizing Chart

PRE-INSTALLATON CHECK LIST FOR SINGLE INSTALL

GAS INFORMATION

Gas Volume - Ensure the correct size pipe is used for the total gas load. If installing more than one fire bowl, ensure the correct size pipe is based upon the distance of the furthest fire bowl away and the total gas load is for all gas appliances on that gas line (i.e. fire bowl, BBQ, torches, etc.).

Gas Pressure & Type of Gas - Verify the gas pressure being supplied to all fire features, if applicable. Is the fire bowl configured for the proper gas type? The True Flame Fire Bowl is shipped for Natural gas (NG). To convert to Propane (LP) gas, a conversion kit must be purchased separately.

Manual Shut-off/Key Valve - A manual key valve is pre-installed into the Fire Bowl.

CAUTION: Ensure you read through page 9 before running the gas line. The water line must be run at the same time to the bottom center of the bowl.

Purging a New Gas Line - Has the gas line been purged of both air and possible debris? Any gas lines buried underground must be pressure tested up to 60 PSI to ensure no leaks. After inspection is complete, most plumbers will release pressure in the line at one location by opening the manual ball/key valve. It is recommended to release pressure by opening a ball/key valve associated with all the fire features. ***Example***: There are four fire bowls on a job, open the first key valve for a few seconds, then close it. Then move on to the next key valve and do the same thing until you have purged the debris out of all four gas lines.

Main Burner Orifice - All fire bowls **MUST** have a main burner orifice installed on the inlet side of the burner. An orifice limits the amount of gas flow to the burner to ensure the flame is a safe and reasonable height to not pose a risk to people or property. The drawing below shows a Natural Gas (NG) orifice. LP gas needs more ventilation and requires the removal of the stainless sleeve on the venturi tube to provide a cleaner flame. See Fig. 4 and page 14 for more detail.

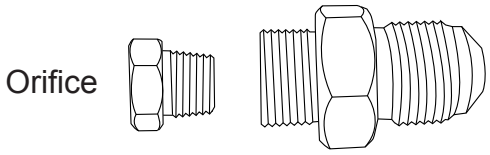

Fig. 4 Natural gas orifice threads into the brass fitting.

MEDIA INFORMATION

Acceptable media placed over top of the burner:

Lava rock media (22# bag) is supplied with bowl. See page 10.

DRAINAGE INFORMATION

For any fire bowl ABOVE ground level requires a drain line or a way for water to exit the bowl.

INSTALLATION REQUIREMENTS OF ALL FIRE FEATURES

REQUIREMENTS

1. This fire bowl is permitted to be placed on a stable, flat combustible surface. The area underneath must be a solid level surface maintaining clearances according the specifications in this manual on page 4.
2. Refer to the NFPA54 (National Fuel Gas Code) for proper pipe sizing. See Table 4 on page 6.
3. Determine the model fire bowl you are preparing to install (Refer to page 4).
4. Follow the local code requirements for the gas type being used. This fire bowl should be installed in accordance with local codes and ordinances or in the absence of local codes, with the latest National Fuel Gas Code, ANSI Z223.1 NFPA54 or CSA B149.1, Natural and Propane Installation Code in Canada.
5. Fire bowls create high temperatures, it is very important to have any combustibles at a safe distance.
6. These fire bowls are designed for **outdoor use only**. Not approved for any indoor use.
7. These fire bowls are designed to have lava rock completely covering the spur burner, so that the burner is not visible. Do not cover more than 1" above the top of the covered burner. When purchasing lava rock use a minimum of 1 to 2-inch diameter as a base to fill the burner pan.
8. Gas lines, water lines and fittings must be installed into the non-combustible structure. All connections must be leak tested before installation of the fire feature. Soapy water leak detection is required on gas lines before regular use of the fire feature.
9. Do not use material that will absorb moisture over time and will not release this moisture quickly. Moisture can boil in this material and can rapidly break apart and cause damage or personal injury.
10. Never leave any other combustible material on top of the fire bowl. This could cause unsafe operation of this system and damage to the component that will not be covered under our warranty.
11. Ventilation is built into the bottom of each fire bowl. No additional vents are required. **WARNING**: DO NOT BURY THE BOTTOM OF THE CONCRETE BOWL INTO EARTH OR OTHER TYPE OF MEDIA . THIS CAN OBSTRUCT AIR FLOW VENTILATION AND VOID THE WARRANTY.

IMPORTANT
Installation of Natural or LP gas should be done by a qualified installer, service agency or gas supplier.
The appliance and its manual shutoff valve must be disconnected from the gas supply piping system during any pressure testing of the system at test pressure testing of the system at test pressures in excess of ½" psig (3.5kPa).

PREPARING THE BOWL FOR INSTALLATION

Carefully lift the burner pan and media out of the bowl and lay aside. The gas flex line is pre-assembled from the key valve to the burner pan venturi and orifice. See Fig. 5. Cut or snip the zip ties inside the bowl and remove the supplied media. Discard the cardboard and zip ties.

Place the bowl into position overtop of gas supply line.

Remove the plastic cap from the installed key valve and connect a flex line (not supplied) from the gas supply to the key valve. Ensure the connections are tight and secure.

Test for gas leaks before proceeding.

Lower the burner pan assembly back into the bowl, resting on the inside lip and conduct a test fire. After test fire is complete, proceed to placing media on top of burner.

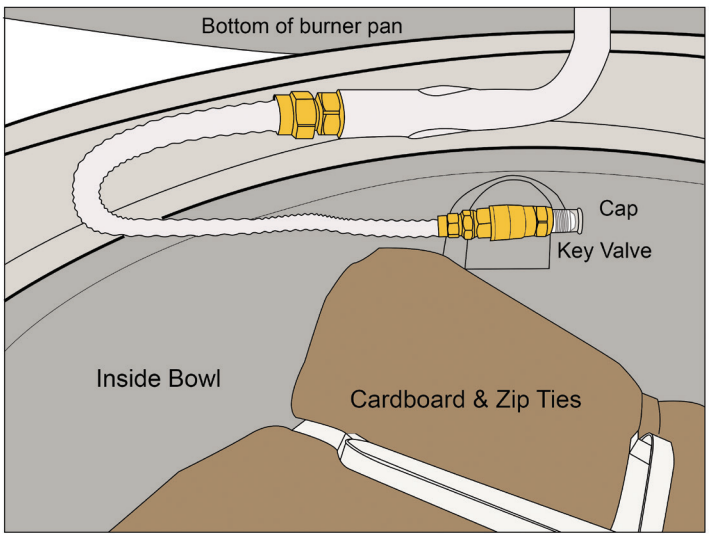

Fig. 5 Installing burner assembly into the bowl.

FIRE & WATER BOWL INSTALLATION

GENERAL INFORMATION

Installation of the bowl for use with water requires planning ahead to ensure you know where the water will be exiting the bowl (i.e. swimming pool, fountain, etc.) It is not recommended to let the water fall/drain directly onto the ground without some type of drainage.

RUNNING GAS AND WATER LINES

- The gas piping shall be installed underground to each fire bowl. The piping shall be reduced to 1/2" NPT at each bowl.
- To eliminate pressure drop, ensure the length of pipe and the quantity of elbows used is minimal. **NOTE:** Do not use yellow corrugated flex gas lines.
- Gas and water lines should be centered in the middle of the column, pedestal, or location the bowl will be placed. See Fig. 6.

CAUTION: Ensure both gas and water lines protrude far enough into the bottom of the bowl to enable your connections.

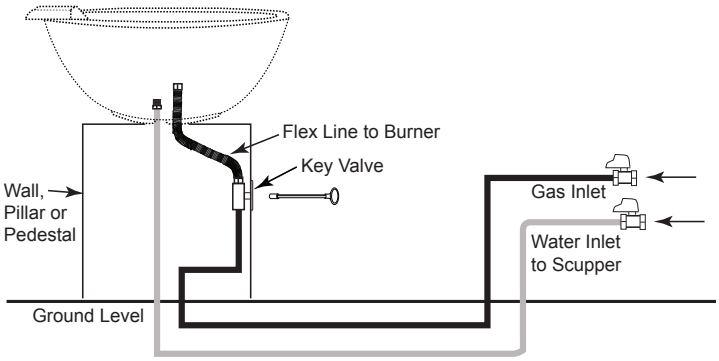

Fig. 6 Water and gas line diagram.

CONNECTING GAS AND WATER LINES TO THE BOWL

Step 1: Lift the burner pan out of the bowl and set aside.

Step 2: Carefully place the bowl overtop of the gas and water lines. **CAUTION:** Two or more people may be needed to sit the bowl in location.

Note: Secure bowl with a mounting plate **(not supplied)** or use adhesive to secure bowl to prevent tipping.

INSTALLATION OF SCUPPER WATER LINE

Water flow requirements: 12-15 gallons per minute (GPM). Scupper has a 3/4" male fitting. See Fig. 7.

The scupper is secured to the bowl and will require a flexible stainless water line. See Fig. 8.

Once the water line is secured, turn ON the water and check for any leaks, then finish the gas line as instructed on page 8.

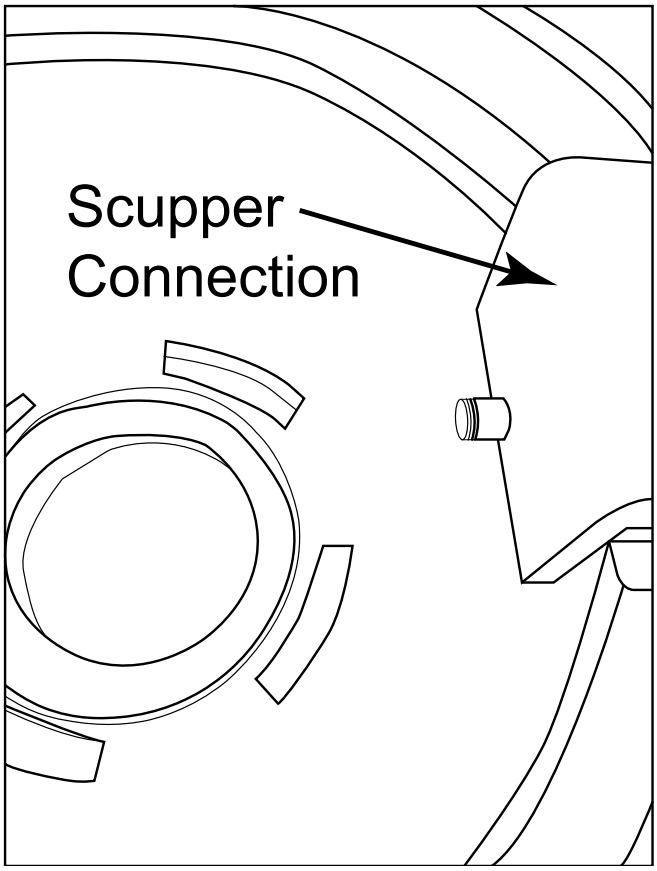

Fig. 7 Shows scupper with 3/4" inlet connection..

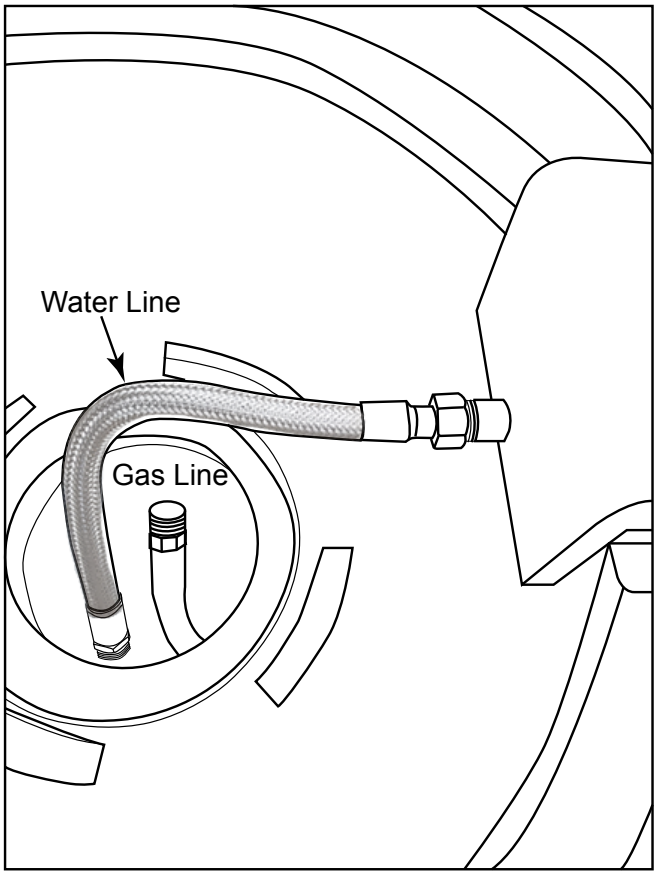

Fig. 8 Shows flex connector **(not supplied)** water line.

MEDIA PREPARATION

MEDIA SPECIFICATIONS

The Firegear Outdoor Fire Bowl models are approved for use with lava rock. Use the media supplied in the bottom of the bowl.

30” bowls use 22 lbs of Firegear, lava rock

Lava rock height should be level and no higher than the top lip of the bowl (approximately 2“ depth from burner pan).

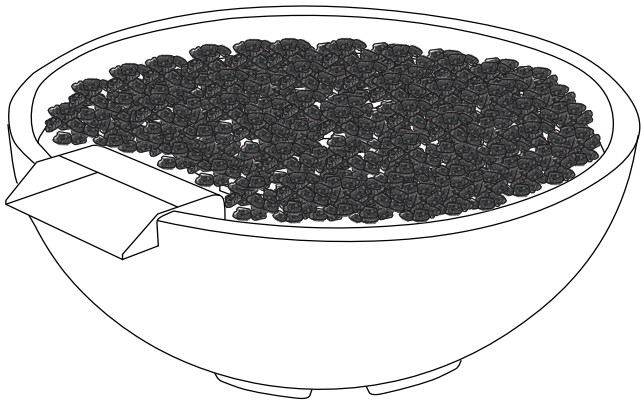

Fig. 9 Medla (lava rock) installation.

INSTALLATION OF MEDIA INTO BURNER PAN

Install lava rock into the burner pan. Ensure the lava rock is a minimum of 1-inch diameter for proper operation.
Note: Do not pour Lava Rock directly from bag. It should be placed naturally and NOT packed in tight. Loose fitting is important to ensure robust flames. Be sure rocks are free of any excessive dust. This prevents the burner pan weep holes from being plugged and holding water.

FIRE BOWL OPERATION

CAUTION: Children and adults should be alerted to the hazards on high surface temperatures and should stay away to avoid burns or clothing ignition. Young children should be carefully supervised when they are in the area of the appliance.

WARNING: Do not use this appliance if any part has been under water. Immediately call a qualified service technician to inspect the appliance and to replace any part of control system and any gas control, which has been under water.

SAFETY WARNINGS

1. Never leave the fire bowl unattended during operation.
2. Clothing or other flammable materials should not be placed on or near the appliance.
3. Any guard or other protective device removed for servicing the appliance must be replaced prior to operating the appliance.
4. Installation and repair should be done by a qualified service person. The appliance should be inspected before use and at least annually by a qualified service person. More frequent cleaning may be required as necessary. It is imperative the control compartment, burners and circulating air passageways of the appliance be kept clean.
5. Inspect the fuel supply connection before each use of the appliance.
6. Temporary storage of this appliance indoors is permissible only if it has been disconnected from its fuel supply (Natural or LP gas line).

WARNING

1. This appliance is hot when operated and can cause severe burns if contacted.
2. Do not burn any solid fuels in this appliance.

LIGHTING INSTRUCTIONS

READ ALL WARNING AND SAFETY INFORMATION ABOVE BEFORE ATTEMPTING TO LIGHT FIRE PIT

CAUTION: ENSURE YOU HAVE LEAK TESTED THE FIRE PIT BEFORE OPERATING

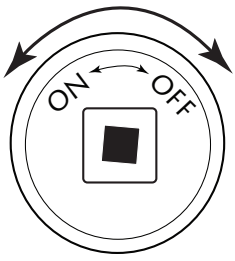

Fig. 10. Key Valve Face

TURNING ON FIRE BOWL

1. Insert key into shut-off valve and secure into square end (See Figs 10 & 11).
2. Light a long match or butane lighter and hold it near the burner. (See Fig. 12)
3. Turn the key slowly counter-clockwise in gas valve (until it stops) to allow gas to flow and simultaneously apply the long burning match or Butane lighter as close to the end burner as possible to light the fire bowl.
4. Gas should ignite within 10 seconds or less. If fire pit does not light within 10 seconds turn key clockwise to turn **OFF** the gas supply. Ensure there is not too much media on top of the burner that might inhibit gas flow and try again in 5 minutes.

TURNING OFF FIRE BOWL

1. Insert key into shut-off valve and secure into square end. See Fig. 10.
2. Turn key clockwise until it stops.
3. After cooling off install cover.

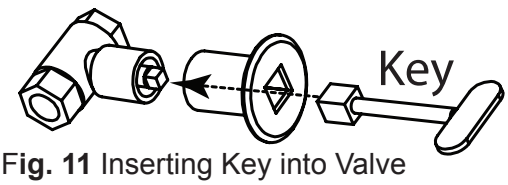

Fig. 11 Inserting Key into Valve

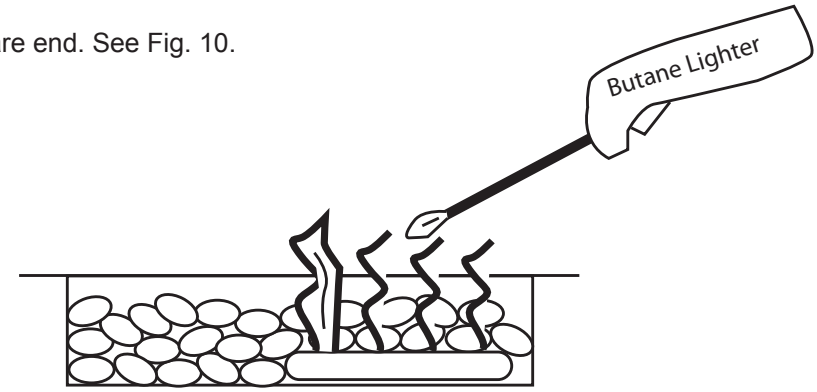

Fig. 12 Lighting fire pit with lighter

REPLACEMENT PARTS

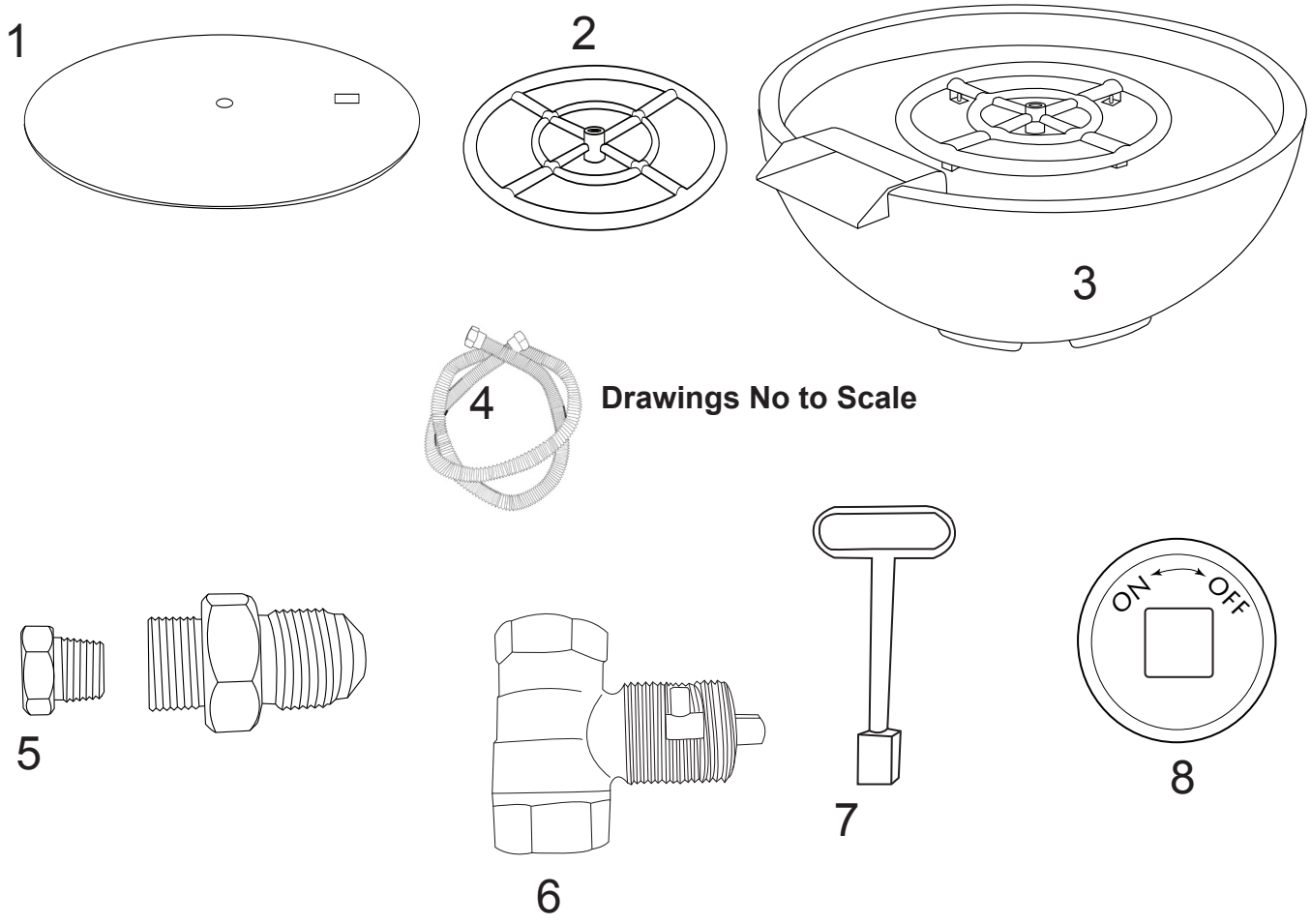

REPLACEMENT PARTS LIST

Item	Description	Qty.	Part Number
1	26¾" round flat stainless disc/pan (used with bowls)	1	N/A
2	12" Ring Burner (used with all models)	1	TF-FR-12SS
3	30" Concrete Fire Bowl	1	See Cover Page
4	⅜" Flex Non-Whistling Gas Line 16" Long	1	T100-9898-16
5	Natural Gas Orifice #18 (4.3mm)	1	LOF-BO-NG18
5A	Liquid Propane Gas Orifice #36 (2.7mm)	1	LOF-BO-LP36
6	Key Valve	1	BVL2S
7	12" Chrome Plated Key	1	KEY-PC-12
8	Chrome Flange (decorative flange used with BVSL2S)	1	CVR-BVL2CP

FIRE BOWL MAINTENANCE

1. The fire bowl should be inspected and cleaned before initial use at least annually by a qualified field service person.
2. Any component that is found faulty must be replaced with an approved component.
3. Any tampering or modifying with the fire bowl is dangerous and voids all warranties.
4. During winter months in cold climates and various seasons operating the fire pit may be affected by weather conditions. It is recommended to use a cover/lid for your fire bowl to protect it from humid/rainy weather conditions when not in use. Heavy rains/downpours could affect the fire bowl operation if not covered; if this occurs ensure you allow the fire pit time to dry out before attempting to operate. **NOTE**: If a combustible type cover is used over the fire bowl when not in use be sure to remove it before operation to prevent a severe safety hazard.
5. Over time stainless steel parts can discolor when heated, usually a golden or brown hue. This discoloration is normal and does not affect the performance of the appliance.
6. Ensure you blow the water lines out at the scupper to prevent any freezing when winterizing.

GFRC MAINTENANCE

- To care for your GFRC (Glass Fiber Reinforced Concrete) product, please utilize careful judgment. It is a durable and forgiving material, but that does not mean you can expose it to harsh chemicals or mechanical cleaning methods which could damage the outer finish. Instead, we recommend you use a soft brush with natural or synthetic bristles, utilizing very light pressure and water to clean the concrete items.

- Concrete by nature, is a porous material and therefore, susceptible to staining. In addition, over time it will age sometimes changing the color just as the common household driveway will. Sealing of products is always recommended to protect the original appearance. Our products are sealed prior to shipment, but the continued care and resealing of the product will be needed every 4-5 years to protect the appearance.

- With a concrete sealant, your concrete will look great and natural for many occasions. Prolonged contact with overly acidic, heavily pigmented or alkali substances should be avoided. We recommend cleaning any spills as quickly as possible. Take caution against use of caustic acids to clean or resurface concrete products. Such caustic acids have historically been used to clean pools, sidewalks or other porous concrete surfaces. These acids will etch the surface and change the structure of the concrete at the surface level. Our concrete is made to have a denser and cleaner look; such etching from caustic acids will change that clean, smooth finish.

- **DO NOT USE HARSH ABRASIVE CLEANERS, ACIDS, PIGMENTED CLEANERS OF ALKALI SUBSTANCES ON CONCRETE PRODUCTS.** While in some applications it MAY be safe to use muriatic acid/hydrochloric acid or sulfuric acid, or other strong chemicals to clean concrete, DO NOT use these cleaners to clean the items we sell made from reinforced concrete. This WILL damage the beautiful finish on the outside of the concrete. Such chemical cleaners are not applicable for use on this type of material.

- Additionally, we do not recommend using high-pressure cleaning, as this could remove the sealed finish. Using a garden hose will be enough pressure to clean the concrete. For normal spills, a quick wipe up and gentle “scrub” with a cotton cloth or similar, should be enough to clean. For stains, which contain dark colors or have been sitting for an extended period of time, you can use a mild soap. Under extreme cleaning needs, you can use a standard mild household chlorine bleach, available in most retail stores, diluted to a very weak mixture of about 1/4 cup bleach to 1 gallon of water. Use this mixture over the entire surface you wish to clean, to ensure even cleaning. Only do this as a last resort as it could change the appearance of the product.

- Please also note that fissures (hairline cracks), can appear on the surface due to age and/or exposure to the atmospheric conditions. These commonly don’t have an effect on durability and do not compromise the structural integrity of the product.

LOF-BO-LP36 (Natural to LP Gas Conversion)

This instruction will properly convert the fire pit from Natural gas to Propane (LP) gas. Follow the steps below to proceed. See Table 2 on page 4 for proper LP orifice.

Step 1: Shut OFF gas supply.

Step 2: Remove media from fire bowl.

Step 3: Carefully lift fire pit out of the bowl.

Step 4: Remove the ⅜" flex connector from the main burner orifice. See Fig. 13 for reference.

Step 5: Remove the flared fitting. Inside the end of the flared fitting is the main burner orifice. Remove the burner orifice and replace it with the new #2.7 LP orifice for the correct model fire bowl.

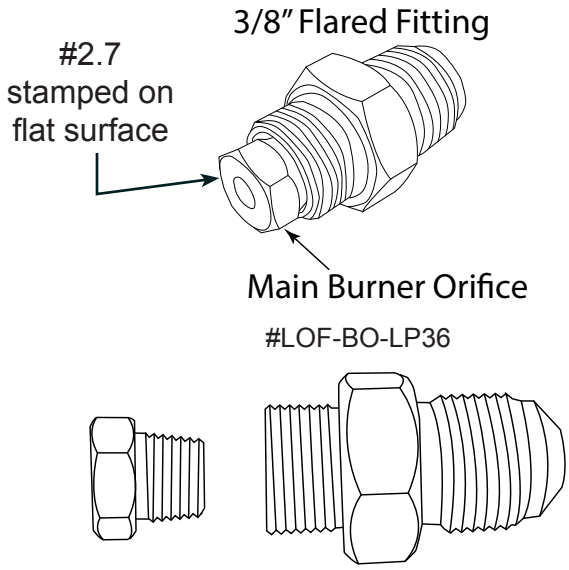

Fig. 13 Shows main burner orifice.

Note: No Teflon tape or thread compound is required when threading brass to brass fittings.

Step 6: After the main burner orifice and brass fitting is removed then slide the air shutter sleeve off the burner tube and expose the hole for the LP gas (Figs. 14 & 15).

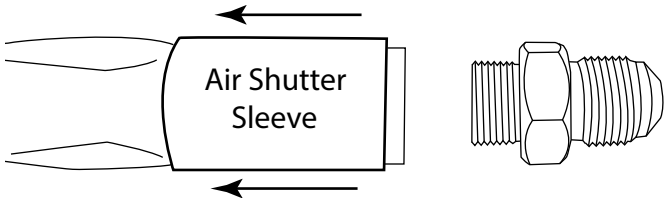

Fig. 14 Natural gas setting; air shutter sleeved installed.

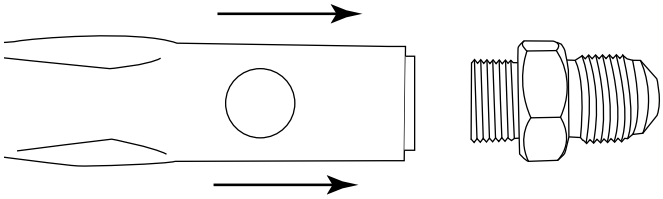

Fig. 15 LP gas setting; air shutter sleeved removed.

Step 7: Install the main burner orifice and brass fitting back into the burner tube.

Step 8: Reattach the 3/8" flex connector to the flared fitting.

Step 9: Reinstall media.

Step 10: Installation is complete. Reinstall the fire pan into the bowl, turn ON the gas supply and conduct a leak test before presuming normal use.

TROUBLESHOOTING

Symptom	Remedy
Fire Bowl won't light	1. Bleed gas line. 2. Ensure all gas supply lines are turned ON. 3. Ensure there is not too much media overtop of burner; it can inhibit gas from flowing. 4. Check gas pressure.
Low flame	1. Ensure the base media is at least 1-inch in diameter and top media is no more than 1-inch over top of burner. 2. Ensure all shut-off valves and key valve is fully open. See page 9; Fig 6. 3. Check for spider webs inside the orifice. 4. Check gas pressure.
Water in my Fire Bowl	1. Excess dust/sand material from media may be blocking the weep holes to relieve water. Remove all media and unplug weep holes. Clean or install new media free of dust and dirt. 2. Ensure fire pit enclosure has proper drainage for water and proper ventilation to dry out. 3. Recommend to purchase a cover/lid to keep excessive water out of the fire pit. 4. Ensure there is not a leak at the scupper fitting.
Whistling Noises	1. Check media to ensure it is not too tightly packed around the burner tube. 2. Ensure a non-whistling flex connector is being used.
No Water at Scupper	1. Ensure the water shut OFF is fully open. 2. Check for any blockage at the outlet of the scupper.

OPTIONAL ACCESSORIES

The following accessories are available from your local Firegear Outdoors dealer/distributor.
Each accessory comes with a separate installation manual. Read each instruction thoroughly before installing.

LP Gas Regulator Gas regulator for LP gas installations. Rated at 100,000 Btu's. **Model:** FG-LPRK *Flexible Gas Line* ⅜" x 12' Quick disconnect flex gas line. Rated at 80,000 Btu's. Used with FG-LPRK **Model:** FG-12QDK **Mounting Plate**: Used to secure bowl when installed in an elevated position. Call (800) 966-8126 for availability.	*Media* *Lava Stones* 1" to 2" size (50 LBS.) **Models**: FG-LS50 *Lava Rock* 1" to 2" size (10 & 40 LBS.) **Models:** FG-LAVA-10 FG-LAVA-40 See catalog for variety of glass media in various colors.	*LP Conversion Kit* **Model:** LOF-BO-LP36
Shut-Off Valves **Model:** 01-387 ⅜" OD Flare x ½" FIP **Model:** 01-487 ½" OD Flare x ½" FIP **Model:** 01-266 ⅜" OD Flare x ⅜" OD Flare **Model:** 01-288 ½" OD Flare x ½" OD Flare	**GL Glass** Min. ½" - ¾" size Various colors are available See Product catalog for details *Sold in 5 LB. bags or 8 bags to a case*	**GRL Reflective Glass** Min. ½" - ¾" size Various colors are available See Product catalog for details *Sold in 5 LB. bags or 8 bags to a case*

FOR TECHNICAL SERVICE, CALL:

Firegear Outdoors, an Earthcore Industries Brand
1600 Riverfork Drive
Huntington, IN 46750
260-388-5653
techsupport@firegearoutdoors.com

Manual changes often occur, ensure to check the Firegear website for any recent updates and warranty information.

FIREGEAR

LIMITED WARRANTY

Firegear Outdoors hereby warrants to the end user that products will be free from material and workmanship defects that prevent safe and correct operation of the product. The warranty commences from date of sale to the end user for the following period:

ALL WARRANTIES WITHIN THIS DOCUMENT ONLY APPLY TO PRODUCTS MANUFACTURED AFTER | 01 / 01 / 2026

BURNER SYSTEMS I BURNERS I COMPONENTS I ACCESSORIES TYPE OF PRODUCT	CONSUMER APPLICATIONS	COMMERCIAL APPLICATIONS
Construction and Manufacturer Defects	Lifetime Warranty	2 Year Warranty
Stainless Steel Burners and Pans	Lifetime Warranty	2 Year Warranty
Pro Series Burners	Lifetime Warranty	2 Year Warranty
Gas Valve, Spark Igniter, and Pilot Assemblies	5 Year Warranty	2 Year Warranty
AWS Electronic Ignition Systems (12 VAC, 24 VAC, 30 VAC)	3 Year Warranty	1 Year Warranty
TPSI Electronic Components	5 Year Warranty	2 Year Warranty
MT Components (Key Valve)	5 Year Warranty	2 Year Warranty
Refractory Gas Log Sets	5 Year Warranty	2 Year Warranty
Skytech Manufactured Optional Controls	2 Year Warranty	1 Year Warranty

OUTDOOR FIREPLACE I KALEA BAY TYPE OF PRODUCT	CONSUMER APPLICATIONS	COMMERCIAL APPLICATIONS
Construction and Manufacturer Defects	Lifetime Warranty	Lifetime Warranty
Stainless Steel Components	Lifetime Warranty	Lifetime Warranty
Gas Valve, pilot Assembly, Power Supply, and Controls	5 Year Warranty	2 Year Warranty
Skytech Manufactured Optional Controls	5 Year Warranty	2 Year Warranty

SANCTUARY SERES - GFRC FIRE FEATURES TYPE OF PRODUCT	CONSUMER APPLICATIONS	COMMERCIAL APPLICATIONS
GFRC Structure	* 3 Year Warranty	* 3 Year Warranty
* The warranty covers manufacturing defects or structural failure. Small stress cracks and surface crazing are a natural occurrence in GFRC products and are not covered within this warranty. Discoloration over time is a natural process and is not covered by this warranty		
Burner System	** Refer to Burner System	** Refer to Burner System
** Please refer to your burner system warranty for more information about your warranty.		

ACCESSORIES TYPE OF PRODUCT	CONSUMER APPLICATIONS	COMMERCIAL APPLICATIONS
Construction and Manufacturer Defects	Lifetime Warranty	Lifetime Warranty
Stainless Steel Components (Lids, Stainless Steel Covers)	Lifetime Warranty	Lifetime Warranty
ESTOP1-0H, Windshields, Hoses & Regulators	1 Year Warranty	1 Year Warranty

For additional details, please refer to the products installation manual

The end-user must provide a bill of sale, canceled check, or payment record to verify the purchase date and to establish the warranty period. This Limited Warranty shall be valid and limited to the original purchaser only.

WARNING: Any modification to the product will void the warranty.

This Limited Warranty shall be limited to the repair and/or replacement of parts that have been proven to be defective under normal use and service. All warranty claims must be made by the Distributor/Dealer account on behalf of the end-user. You may contact Technical Support at 800-966-8126.

Our Technical Service Department must confirm all approved defects. If a defect is confirmed and we approve the claim, we will replace such parts without charge. This warranty gives you specific legal rights, and you may also have other rights, which vary from state to state.

The manufacturer may request defective products returned with an RMA (Return Merchandise Authorization) issued by Firegear Outdoors for specific products, which is considered to be the nature of the defect and or warranty claim. Product to be returned should; be packed so as not to incur damages during transportation. Firegear Outdoors is not responsible for damages on returned items. RMA is valid for thirty (30) days from the date issued. The RMA must be clearly marked on the outside of the package.

Please check with your local building code department or governing agency for proper approvals before purchasing. Firegear Outdoors is not responsible for any violation of local codes.

Travel, diagnostic cost, service labor to repair the defect on warranty parts to and from the factory will be the responsibility of the owner. We will not be responsible for labor charges and/or damage incurred in installation, repair, and replacement. Firegear Outdoors is not responsible for Issues related to gas or electrical installation.

The Limited Warranty is voided if not assembled, installed, and operated as intended. This Limited Warranty does not cover any defects due to accident, abuse, misuse, alteration, misapplication, vandalism, improper installation or improper maintenance or service, removal from the original location, or re-installation into another location, or failure to perform normal and routine maintenance.

Damage due to severe weather conditions such as hail, hurricanes, earthquakes, tornadoes, discoloration due to overheating, exposure to chemicals (including chlorine and salt), either directly or in the atmosphere, or very high humidity, is not covered by this Limited Warranty. Coastal, humid and/or salt environments are subject to manufacturer review. All out-of-box claims must be made within 30 days of purchase and must be made prior to installation. Any product installed damaged will be considered damaged during installation and not covered under warranty.

There are no other express warranties except as set forth herein. For consumer applications, any applicable implied warranties of merchantability and fitness are limited in duration to the period of coverage of this Limited Warranty. Some states do not allow limitation on how long an implied warranty lasts, so this limitation may not apply to you.

For Commercial Applications, the liability of Firegear Outdoors is limited to the express terms of this warranty. We expressly disclaim any and all implied warranties, including any warranties of fitness for a particular purpose or merchantability.

We are not liable for any special, indirect or consequential damages. Our maximum liability is limited to the purchase price of the purchased units. Some states do not allow the exclusion or limitation of incidental or consequential damages, so this limitation or exclusion may not apply to you.

We do not authorize any person or company to assume for it any other obligation or liability in connection with the sale, installation, use, removal, return, or replacement of its equipment, and or such representation are binding.

FIREGEAR
Firegear Outdoors
1600 Riverfork Dr. East
Huntington, IN 46750

www.firegearoutdoors.com

Having problems getting the fire pit to operate? Don't leave the job site! We want to help! Call 260-355-5577 for Technical Support between the hours of 8:30AM to 4:30PM

BEFORE YOU CALL WE WILL NEED THIS INFORMATION

1. Model Number: _____
2. Serial Number: _____
3. How long is the gas line run? Nat Gas ____ LP Gas ____
4. What size is gas line? _____
5. Inlet Gas Pressure: _____WC
   Manifold Gas Pressure: _____ WC
6. What type of media are you using? _____
7. Review the troubleshooting section in the installation manual.
8. What are the symptoms? Please be prepared to explain.
9. Be prepared to send photos to us when on the phone.
10. Found missing or damaged parts? Let us know ASAP or send photos.